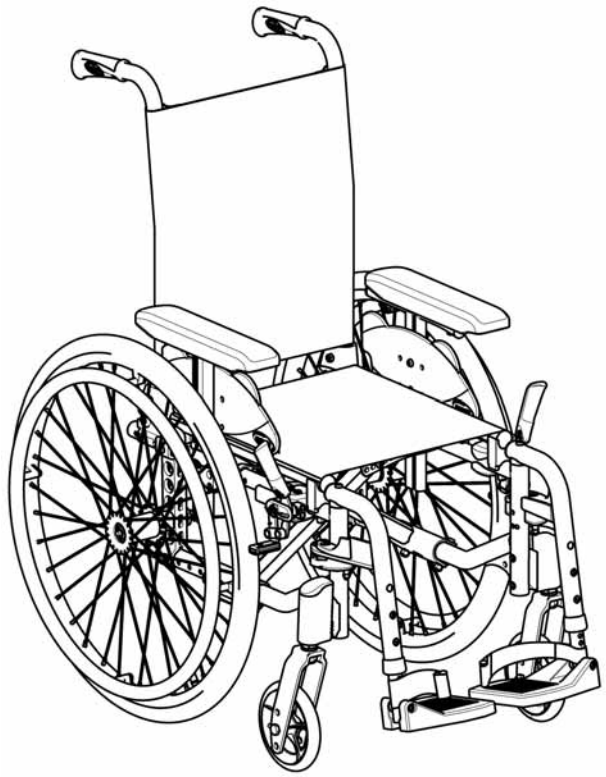

Invacare® Action 3 Junior

en Pediatric wheelchair
User Manual

This manual MUST be given to the user of the product.
BEFORE using this product, this manual MUST be read and saved for future reference.

Yes, you can.

©2020 Invacare Corporation
All rights reserved. Republication, duplication or modification in whole or in part is prohibited without prior written permission from Invacare Corporation. Trademarks are identified by ™and ®. All trademarks are owned by or licensed to Invacare Corporation or its subsidiaries unless otherwise noted.

Contents

1 General 5
1.1 Introduction 5
1.2 Symbols in this Document 5
1.3 Warranty Information 5
1.4 Limitation of Liability 6
1.5 Compliance 6
1.5.1 Product-specific standards 6
1.6 Service Life 6

2 Safety 7
2.1 Safety information 7
2.2 Safety Devices 9
2.3 Labels and symbols on the product 9

3 Product Overview 11
3.1 Product Description 11
3.2 Intended use 11
3.3 Main parts of the wheelchair 12
3.4 Parking brakes 13
3.5 Backrest 14
3.5.1 Standard Backrest Cover 14
3.5.2 Adjustable Backrest Cover 14
3.5.3 Backrest cover height 15
3.5.4 Fixed backrest 16
3.5.5 Folding backrest 16
3.5.6 Reclining backrest 16
3.5.7 Backbrace for the backrest 17
3.5.8 Push handles 18
3.6 Mudguard 19
3.7 Armrests 20
3.7.1 Armrest, stepless height adjustable, removable 20
3.8 Leg rests 21
3.8.1 Swing away leg rests 21
3.8.2 Swing away, angle adjustable leg rests 22
3.9 Anti-tipper 24
3.10 Seat cushion 25

4 Options 26
4.1 Transit version 26
4.2 Posture belt 27
4.3 Headrest 28
4.4 Stabilizer kit 29
4.5 Tipper aid 29
4.6 Table tray 29
4.7 Swiveling, table tray 30
4.8 Transfer kit wheels 31
4.9 Air pump 31
4.10 Passive illumination 32

5 Setup 33
5.1 Safety information 33

6 Using the wheelchair 34
6.1 Safety information 34
6.2 Braking during use 35
6.3 Move to/from the wheelchair 36
6.4 Driving and Steering the Wheelchair 37
6.5 Negotiating steps and kerbs 38
6.6 Going up and down stairs 39
6.7 Negotiating Ramps and Slopes 40
6.8 Stability and balance when seated 42

7 Transport 43
7.1 Safety information 43
7.2 Folding and unfolding the wheelchair 43
7.3 Lifting the wheelchair 44
7.4 Removing and fitting the rear wheels 45
7.5 Transporting the Mobility Device without Occupant 45
7.6 Transporting the occupied wheelchair in a vehicle 46

8 Maintenance 52
8.1 Safety information 52
8.2 Maintenance Schedule 52

8.3 Cleaning and Disinfection 54
8.3.1 General Safety Information. 54
8.3.2 Cleaning Intervals. 55
8.3.3 Cleaning 55
8.3.4 Disinfection 55

9 Troubleshooting 56

9.1 Safety information. 56
9.2 Identifying and repairing faults 57

10 After Use 58

10.1 Storage 58
10.2 Disposal 58
10.3 Reconditioning 58

11 Technical Data 59

11.1 Dimensions and weight 59
11.2 Maximum Weight of Removable Parts 60
11.3 Tyres. 61
11.4 Materials. 61
11.5 Environmental conditions. 62

1 General

1.1 Introduction

This user manual contains important information about the handling of the product. To ensure safety when using the product, read the user manual carefully and follow the safety instructions.

Note that there may be sections in this document, which are not relevant to your product, since this document applies to all available models (on the date of printing). If not otherwise stated, each section in this document refers to all models of the product.

The models and configurations available in your country can be found in the country-specific sales documents.

Invacare reserves the right to alter product specifications without further notice.

Before reading this document, make sure you have the latest version. You find the latest version as a PDF on the Invacare website.

If you find that the font size in the printed document is difficult to read, you can download the PDF version from the website. The PDF can then be scaled on screen to a font size that is more comfortable for you.

For more information about the product, for example product safety notices and product recalls, contact your Invacare distributor. See addresses at the end of this document.

In case of a serious incident with the product, you should inform the manufacturer and the competent authority in your country.

1.2 Symbols in this Document

Symbols and signal words are used in this document and apply to hazards or unsafe practices which could result in personal injury or property damage. See the information below for definitions of the signal words.

WARNING
Indicates a hazardous situation that could result in serious injury or death if it is not avoided.

CAUTION
Indicates a hazardous situation that could result in minor or slight injury if it is not avoided.

IMPORTANT
Indicates a hazardous situation that could result in damage to property if it is not avoided.

Tips and Recommendations
Gives useful tips, recommendations and information for efficient, trouble-free use.

1.3 Warranty Information

We provide a manufacturer's warranty for the product in accordance with our General Terms and Conditions of Business in the respective countries.

Warranty claims can only be made through the provider from whom the product was obtained.

1.4 Limitation of Liability

Invacare accepts no liability for damage arising from:

- Non-compliance with the user manual
- Incorrect use
- Natural wear and tear
- Incorrect assembly or set-up by the purchaser or a third party
- Technical modifications
- Unauthorised modifications and/or use of unsuitable spare parts

1.5 Compliance

Quality is fundamental to the company's operation, working within the disciplines of ISO 13485.

This product features the CE mark, in compliance with the Medical Device Regulation 2017/745 Class I. The launch date of this product is stated in the CE declaration of conformity.

We are continuously working towards ensuring that the company's impact on the environment, locally and globally, is reduced to a minimum.

We only use REACH compliant materials and components.

1.5.1 Product-specific standards

The wheelchair has been tested in accordance with EN 12183. It includes testing for flammability.

For further information about local standards and regulations, contact your local Invacare representative. See addresses at the end of this document.

1.6 Service Life

The expected service life of this product is five years when used daily and in accordance with the safety instructions, maintenance intervals and correct use, stated in this manual. The effective service life can vary according to frequency and intensity of use.

2 Safety

2.1 Safety information

This section contains important safety information for the protection of the wheelchair user and assistant and for safe, trouble-free use of the wheelchair.

WARNING!
Risk of death or serious injury
In case of fire or smoke, wheelchair occupants are at particular risk of death or serious injury, when they are not able to move away from the source of fire or smoke. Lighted matches, lighter and cigarettes can cause an open flame in the wheelchair surroundings or on clothes.
– Avoid using or storing the wheelchair near open flames or combustible products.
– Do not smoke while using the wheelchair.

WARNING!
Risk of accidents and serious injury
Accidents with resulting serious injury can occur if the wheelchair is wrongly adjusted.
– Adjustments at the wheelchair always must be carried out by a qualified technician.

WARNING!
Risk due to driving style being unsuitable for the conditions
There is a risk of skidding on wet ground, gravel or uneven terrain.
– Always adjust your speed and driving style to the conditions (weather, surface, individual ability, etc.).

WARNING!
Risk of injury
In a collision you could sustain injury to parts of your body that extend beyond the wheelchair (e.g. feet or hands).
– Avoid an unbraked collision.
– Never drive into an object head-on.
– Drive carefully through narrow passages.

WARNING!
Risk due to wheelchair being out of control
At high speed you could lose control of your wheelchair and overturn.
– Never exceed a speed of 7 km/h.
– Avoid collisions in general.

WARNING!
Risk of tilting
The position of the rear wheel axle and the angle of your wheelchair's backrest are two of the key adjustments that can affect your stability whilst sitting in the wheelchair.
– These changes, any front wheels position and/or angle fork adjustments to the set-up of your wheelchair must only be performed at the direction of a qualified technician who has fully risk assessed the implication of any changes to the wheelchair configuration. Therefore, consult with your authorized provider.

CAUTION!
Risk of burning
The wheelchair components can heat up when exposed to external sources of heat.
– Do not expose the wheelchair to strong sunlight before use.
– Before usage, check all components that come into contact with your skin for their temperature.

CAUTION!
Risk of getting fingers caught
There is always a risk of getting, e.g. fingers or arms, caught in the moving parts of the wheelchair.
– Make sure when activating the folding or insertion mechanisms of moving parts, such as the removable axle of the rear wheel, folding backrest or anti-tipper, that nothing becomes caught.

CAUTION!
Risk of tipping
The hanging of additional load (back pack or similar items) onto your chair backposts can affect the rearward stability of your wheelchair, especially when used in combination with angle adjustable backrests.
– Invacare strongly recommend the use of anti-tipper (available as an option) when using your backposts with additional load.

CAUTION!
Risk of injury
– In case of pressure sore or injured skin, protect your injure to avoid a direct contact with the fabrics of the device. Refer to a healthcare professional for medical advices.

CAUTION!
Risk of injury
When combining the wheelchair with another device, the restrictions of both devices apply for the combination. E.g. the maximum user weight of the device may be lower.
– Only use combinations with other devices which are allowed by Invacare. Contact your authorized provider for more information.
– Before use, read the user manual of each device and check the restrictions.

2.2 Safety Devices

WARNING!
Risk of accidents
Safety devices that are incorrectly set or no longer working (brakes, anti-tipper) can cause accidents.
– Always check that the safety devices are working before you use the wheelchair and have them checked regularly by a qualified technician or your authorized provider.

CAUTION!
Risk of Injury
Non-original or wrong parts may affect the function and safety of the product.
– Only use original parts for the product in use.
– Due to regional differences, refer to your local Invacare catalog or website for available options or contact your Invacare distributor. See addresses at the end of this document.

The functions of the safety devices are described in chapter *3 Product Overview, page 11*.

2.3 Labels and symbols on the product

Identification label

The identification label is attached to the frame of your wheelchair and gives the following information:

Ⓐ Manufacturer's address

Ⓑ Date of manufacture

Ⓒ Product description

Ⓓ Seat width

Ⓔ Reference number

Ⓕ Serial number

Ⓖ Medical device

Ⓗ Serial number barcode

Ⓘ EAN/HMI barcode

Ⓙ Maximum user weight

Ⓚ Read user manual

Ⓛ European conformity

	Read user manual
	Indicates a hazardous situation that could result in serious injury or death if it is not avoided.

Non-locking side parts warning label

	Do not lift the wheelchair by non-locking side parts.

Posture belt information label

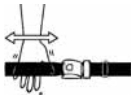	The posture belt has the good length, when there's just sufficient space for a flat hand between body and belt.

Reclining mechanical backrest information label

	Push on the backrest canes (1) before operating the levers (2), this is to release the auto-locked security system. This label is attached to the upper part of the backrest cane (right side).

Snap hook symbols

Depending on the configuration, some wheelchairs may be used as a seat in a motor vehicle, some may not.

ISO 7176-19	Tie-down positions where the restraint system straps must be placed in case of transporting the occupied wheelchair in a motor vehicle. This symbol is only attached to the wheelchair when it is ordered with the transportation kit option.

	WARNING Symbol This wheelchair is not configured for passenger transport in a motor vehicle. This symbol is attached to the frame close to the identification label.

3 Product Overview

3.1 Product Description

This is a pediatric wheelchair with crossbar folding mechanism and swing-away leg rests.

> **!** **IMPORTANT!**
> The wheelchair is manufactured and configured individually to the specifications in the order. The specification must be performed by a healthcare professional according to the user's requirements and health condition.
> – Consult a healthcare professional if you intend to adapt the wheelchair configuration.
> – Any adaptation should be performed by a qualified technician.

3.2 Intended use

The pediatric wheelchair is intended to provide mobility to persons limited to a sitting position, who are propelling the wheelchair themselves frequently.

The wheelchair is intended for persons ages 2 and up (children and adolescents). The weight of the wheelchair occupant must not exceed the maximum user weight as stated in the Technical Data section and on the identification label.

The intended user is the wheelchair occupant and/or an assistant.

The user should physically and mentally be able to use the wheelchair safely (e.g. to propel, steer, brake).

The wheelchair may be used indoors and outdoors on level ground and accessible terrain.

Indications

- Considerable to complete impairment of mobility due to structural and/or functional damage to the lower extremities.
- Sufficient strength and gripping function of arms and hands to propel the wheelchair.

There are no contraindications known, when using the wheelchair as intended.

3.3 Main parts of the wheelchair

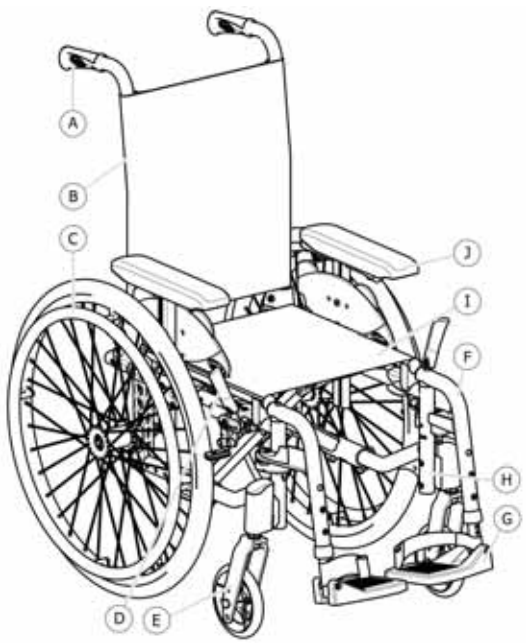

Ⓐ Push handle
Ⓑ Backrest
Ⓒ Rear wheel with handrim
Ⓓ Parking brake
Ⓔ Front fork with castor
Ⓕ Leg rests, swiveling
Ⓖ Footrest
Ⓗ Frame
Ⓘ Seat
Ⓙ Armrest

ℹ The equipment of your wheelchair may differ from the diagram as each wheelchair is manufactured individually to the specifications in the order.

3.4 Parking brakes

The parking brakes are used to immobilize the wheelchair when it is stationary to prevent it from rolling away.

WARNING!
Risk of overturning if you brake sharply
If you engage the parking brakes while you are moving, the direction of movement can become uncontrollable and the wheelchair may stop suddenly, which can lead to a collision or to you falling out.
– Never engage the parking brakes while you are moving.

WARNING!
Risk due to wheelchair being out of control
– The parking brakes must be operated simultaneously.
– Do not engage the parking brakes to slow down the wheelchair.
– Do not lean on the parking brakes for support or transfer.

WARNING!
Risk of overturning
The parking brakes will not operate correctly unless there is sufficient air in the tyres.
– Ensure the correct tyre pressure, *11.3 Tyres, page 61*.

CAUTION!
Risk of pinching or crushing
There may be a very small gap between the rear wheel and the parking brake with the risk that you could trap your fingers.
– Keep your fingers away from movable parts when using the brake, always keep your hand on the brake lever.

The distance between the brake shoe and the tyre can be adjusted. The adjustment must be carried out by a qualified technician.

Standard brake

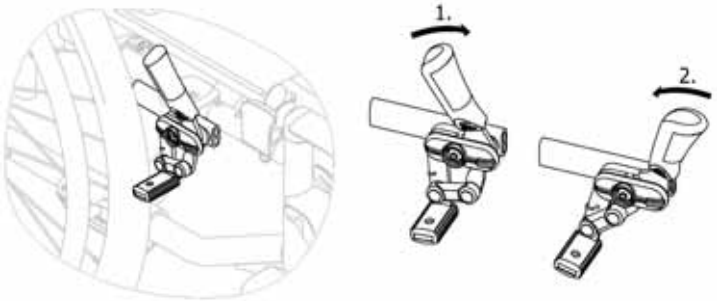

1. To engage the brake, push the brake lever forwards with the palm as far as possible.
2. To disengage the brake, pull the brake lever backwards with the low fingers.

Pull brake

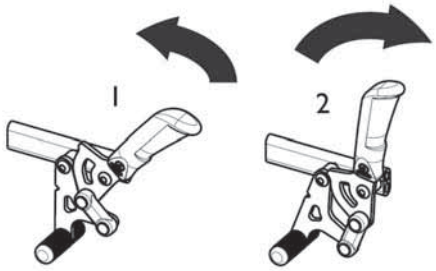

1. To engage the brake, pull the brake lever backwards with the low fingers as far as possible.
2. To disengage the brake, push the brake lever forwards with the palm.

The lever of the push handle can be folded back to facilitate transfers. To do so, pull up the lever and fold it backwards.

3.5 Backrest

There are three types of backrest (Fixed, Folding and Reclining) available.

WARNING!
Risk of injury to the assistant and damage to the wheelchair
Tilting the chair with a heavy user can hurt the assistant's back and damage the chair.
– Make sure to be able to safely control the wheelchair with a heavy user before performing a tilting maneuver.

3.5.1 Standard Backrest Cover

A standard backrest cover is available for all backrest types. These covers are not adjustable.

WARNING!
Risk of tipping
If the standard backrest cover become slack, the tipping point of your wheelchair is changed for the worse.
– Slack standard backrest cover must be replaced by a qualified technician.

3.5.2 Adjustable Backrest Cover

You can adjust the tension of the backrest cover as required.

Adjusting the backrest cover

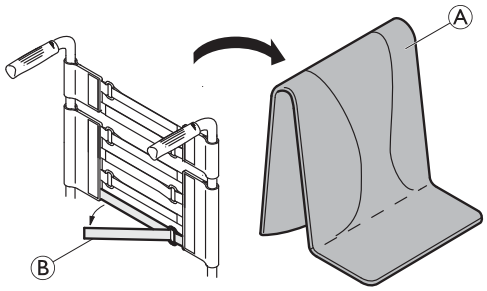

1. Remove the backrest cushion Ⓐ.
2. Loosen the hook and loop strips Ⓑ on the rear of the backrest cover by simply pulling on them.
3. Tighten or loosen the strips as required then reattach them.

WARNING!
Risk of tipping
If the bands are set very loose, the tipping point of your wheelchair is changed for the worse.
– Ensure that the bands are set correctly.

IMPORTANT!
– Do not overtighten the bands; this is to ensure that the geometry of the wheelchair is not changed.

IMPORTANT!
– Only ever tighten the bands when the wheelchair is unfolded.

3.5.3 Backrest cover height

The backrest cover height can be adjusted for all backrest types.

WARNING!
Risk of tipping
The hanging of additional load (back pack or similar items) onto your wheelchair back posts can affect the rearward stability of your wheelchair. This can cause the chair to tip backwards causing injury.
– Therefore, Invacare strongly recommend the use of anti-tippers (available as an option) when using your back posts with additional load (back pack or similar items).

The height of the backrest cover can be adjusted on the back posts. The adjustment must be carried out by a qualified technician.

3.5.4 Fixed backrest

Fixed backrest of 0° and 7°: these two backrests do not require adjustments.

3.5.5 Folding backrest

To save space for transporting the wheelchair, the backrest can be folded.

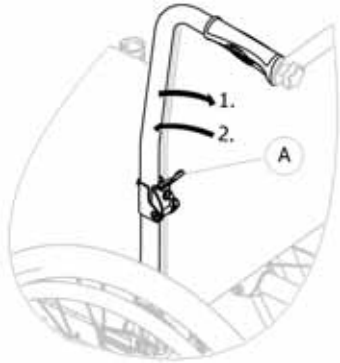

Folding and unfolding the backrest

1. Operate lever Ⓐ by pulling it and fold the top of the backrest.
2. To return to the initial position, bring the top in the vertical position; it locks automatically.

3.5.6 Reclining backrest

To achieve a more comfort position for the user, the backrest can be reclined.

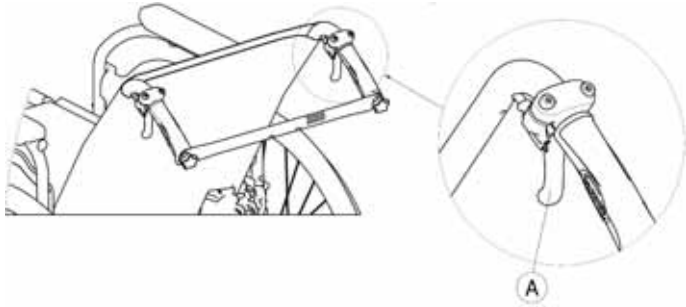

WARNING!
Risk of tipping
Do not move the wheelchair when the backrest is in reclined position.
– Invacare strongly recommend the use of anti-tippers (available as an option) when the backrest is in reclined position .

Backrest angle

The angle of the backrest can be adjusted in four steps (0° to 30°) with the mechanical version, and stepless with the gas struts version.

WARNING!
Risk of injury
– Always make these adjustments before the user settles down in the wheelchair to prevent injuries.
– Invacare strongly recommends the use of anti-tippers (available as an option) in combination with all rear wheel positions when you use your backrest with an angle of 12° and more

IMPORTANT!
– Push on the backrest canes before operating the levers, this is to release the auto-locked security system.

1. Release the auto-locked system by pushing on the backrest canes.
2. Simultaneously pull the levers Ⓐ to provides the same angle on both sides.
3. Release the levers when you reach the desired angle.

3.5.7 Backbrace for the backrest

The backbrace links the two push handles, provides tension to the backrest upholstery and must always be in position on recliner versions.

CAUTION!
– Do not use the backbrace to push the wheelchair. The backbrace is not a push bar !
– Do not attempt to lift the wheelchair using the backbrace ; it may come loose and it could break.
– Keep your fingers away from movable parts and sharp edges to prevent injuries.

Folding the backbrace

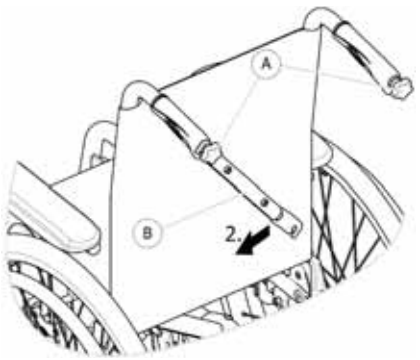

1. Slightly loosen the two hand screws Ⓐ , pull up the backbrace Ⓑ and swivel it downwards along the backrest.
2. Fold the backbrace Ⓑ until it is in vertical position.

Unfolding the backbrace

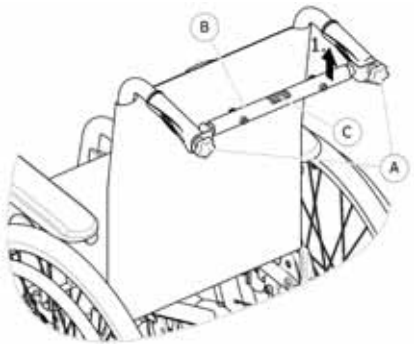

1. Fold the backbrace Ⓑ upwards.
2. Align the backbrace Ⓑ with the push handle and push it down on the hand screw Ⓐ.
3. Firmly tighten the hand screw Ⓐ and makes sure that the TWO hand screws Ⓐ are properly tighten .

ℹ It is important to ensure that the backbrace is correctly fitted and engaged at all times when the chair is in use. It should not be left hanging loose (see label Ⓒ on the backbrace).

3.5.8 Push handles

! **IMPORTANT!**
– Always check the push handles before using the wheelchair, as to whether the hand grips are secure, cannot be turned and cannot be pulled off.

Height adjustable, rear set push handles (optional)

The height adjustable, rear set push handles allow any assistant to adjust the handles to a comfortable level.

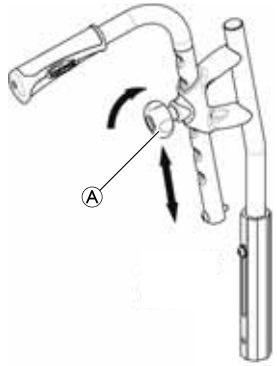

1. To set the height of the push handles, loosen the knob Ⓐ, push the handle to the desired position and tighten the knob again.

CAUTION!
If the knob is not correctly tightened, the push handle could accidentally come off the backrest tube while pushing it upwards.
– Make sure that the knob is firmly tightened.

Height adjustable, integrated push handles (optional)

The height adjustable, integrated push handles allow any assistant to adjust the handles to a comfortable level.

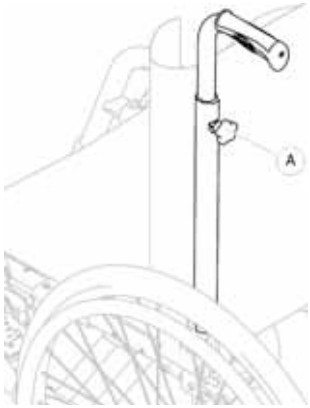

1. To set the height of the push handles, loosen the knob Ⓐ, push the handle to the desired position and tighten the knob again.

CAUTION!
If the knob is not correctly tightened, the push handle could accidentally come off the backrest tube while pushing it upwards.
– Make sure that the knob is firmly tightened.

3.6 Mudguard

In order to prevent dirt from the wheels spraying upwards, a removable mudguard can be fitted. The position of the mudguard can be adjusted.

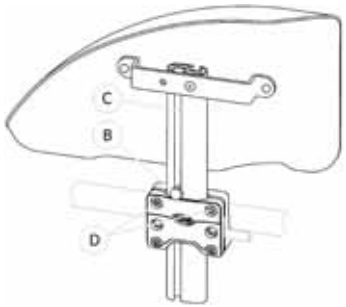

Removing

1. Pull the mudguard upwards out of the holder.
2. To adjust how easy or difficult it is to pull the mudguard out of the holder, change the degree to which the screws Ⓓ are tightened.

Fitting

1. Push the mudguard into the holder.

Adjusting the height

1. Loosen the screw Ⓑ with 10 mm spanner in the groove Ⓒ of the armrest tube.
2. Move the armrest upwards or downwards until you reach the desired height, while keeping screw Ⓑ in place (at the top edge of the holder).
3. Tighten the screw Ⓑ (5–6 Nm).
4. Perform the setting on both sides.

3.7 Armrests

WARNING!
Risk of injury
The side rests are not locked and can be easily pulled out upwards.
– Do not lift or transfer the wheelchair using the side rests.
– Do not use the side rests for transportation when carrying the wheelchair up- or downstairs.

CAUTION!
Risk of pinching
– Keep your fingers away from movable parts during removing, fitting or adjusting the armrest.

3.7.1 Armrest, stepless height adjustable, removable

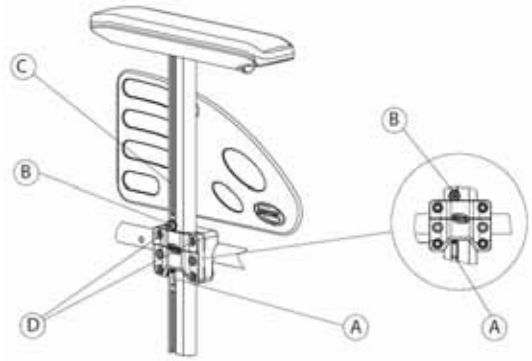

Removing

1. Apply the parking brake on both sides.
2. Previously press on the locking mechanism Ⓐ located at the bottom of the armrest vertical bracket (if so equipped).
3. Pull the armrest by the arm cushion out of the holder.
4. To adjust how easy or difficult it is to pull the armrest out of the holder, change the degree to which the screws Ⓓ are tightened.

Fitting

1. Push the armrest into the holder.

Adjusting the height

1. Loosen the screw Ⓑ with 5 mm Allen key in the groove Ⓒ of the armrest tube.
2. Move the armrest upwards or downwards until you reach the desired height, while keeping screw Ⓑ in place (at the top edge of the holder).
3. Tighten the screw Ⓑ (5–6 Nm).
4. Perform the setting on both sides.

3.8 Leg rests

WARNING!
Risk of injury
– Never lift the wheelchair by the footrest supports or leg rests.

CAUTION!
Risk of pinching or crushing fingers
There are swing mechanisms where you could trap your fingers.
– Be careful when using, swinging, disassembling or adjusting these mechanisms.

IMPORTANT!
Risk of damage to the leg rest mechanism
– Do not place anything heavy, or let children sit on the leg rest.

3.8.1 Swing away leg rests

Swing outwards

1. Activate the release lever Ⓐ and swing the leg rests to the outside.

Swing forwards

1. Swing the leg rest forwards until it engages.

Unhinging

1. Activate the release lever Ⓐ.
2. Pull the leg rest upwards.

Hinging

1. Hinge the leg rest on the front of the frame and swing it forwards until it engages.

3.8.2 Swing away, angle adjustable leg rests

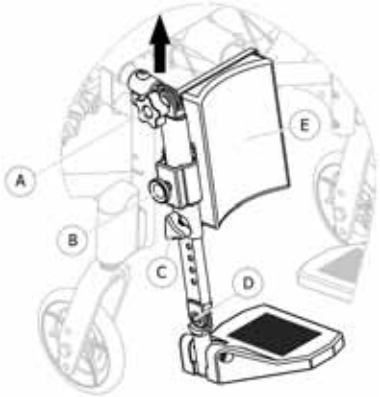

Swing outwards

1. With one hand, sightly pull the leg rest upwards (up to 20 mm).
2. Swing the leg rest to the outside.

Swing forwards

1. Swing the leg rest forwards.
2. Sightly push the leg rest downwards until it engages.

Unhinging

1. Pull the leg rest upwards.

Hinging

1. Hinge the leg rest on the front of the frame and swing it.
2. Sightly push the leg rest downwards until it engages.

Adjusting angle

1. Rotate the knob Ⓐ with one hand while supporting the leg rest with your other hand.
2. When a suitable angle is obtained, lock the knob Ⓐ into the desired position.

Adjusting calf pad

The calf pad Ⓔ swings away during transfers and has height adjustment options.

Height adjustment:

1. After loosening the fixing screw Ⓑ , move the calf pad Ⓔ to the desired height.
2. Firmly tighten the fixing screw.

Adjusting foot plate

There are three different fold-up foot plates available:

- Height adjustable foot plates
  1. Loosening the fixing bolt Ⓑ with 5 mm Allen Key and 10 mm spanner.
  2. Adjust into one of preset positions and tighten the fixing bolt (5 Nm) Ⓑ into the desired position.

- Height and angle adjustable foot plates
  Height adjustment:
  1. After loosening the knob Ⓒ , adjust into one of preset positions.
  2. Tighten the knob Ⓒ into the desired height.

  Angle adjustment:
  1. After loosening the fixing screw Ⓓ with 5 mm Allen key.
  2. Adjust the angle positions and firmly tighten the fixing screw Ⓓ (12 Nm) into the desired position.

- One piece footboard

  Height adjustment:
  1. Loosening the fixing bolt Ⓑ with 5 mm Allen Key and 10 mm spanner.
  2. Adjust into one of preset positions and tighten the fixing bolt (5 Nm) Ⓑ into the desired position.

  Angle adjustment:
  1. After loosening the fixing screw Ⓓ with 5 mm Allen key.
  2. Adjust the angle positions and firmly tighten the fixing screw Ⓓ (12 Nm) into the desired position.

Invacare recommends that foot plate adjustment is carried out by a qualified technician.

ⓘ To ensure a good position of the feet, two types of straps can be provided; the heel strap (serial) and the calf strap (optional) attached to the leg rest support. Both adjustable by hook and loop fasteners.

3.9 Anti-tipper

An anti-tipper prevents the wheelchair from tipping backwards.

WARNING!
Risk of overturning
Anti-tippers that are incorrectly set or no longer working can lead to overturning.
– Always check that the anti-tipper is working before using the wheelchair and have it set or readjusted by a qualified technician when required.
– In some configurations, the static stability of the wheelchair may be lower than 10°; Invacare strongly recommends the use of anti-tipper (available as an option).

WARNING!
Risk of overturning
On uneven or soft ground, the anti-tipper can sink into potholes or directly into the ground, thereby curtailing or eliminating its safety function.
– Only use the anti-tipper when travelling on even and firm ground.

IMPORTANT!
Risk of damage
– Never step on the anti-tipper or use it as a tipping aid.

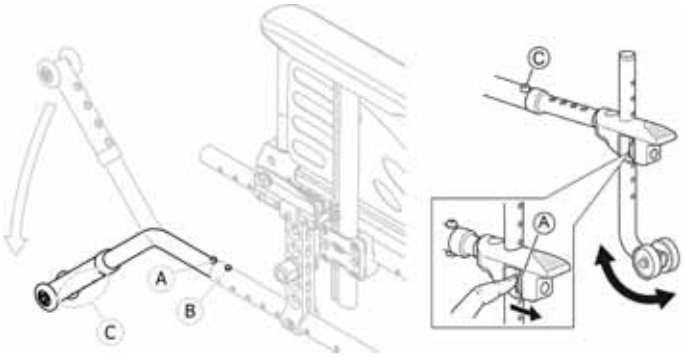

Activating the anti-tipper

1. Release the spring button Ⓐ and swivel the anti-tipper downwards until it engages and the front release button Ⓑ snaps into the frame hole.
2. Ensure front release button Ⓑ protrudes fully through frame hole.

WARNING!
Risk of tipping
An activated anti-tipper can catch when negotiating a step or an edge.
– Always deactivate the anti-tipper before driving over a step or kerb.

Deactivating the anti-tipper

1. Release the spring button Ⓐ and swivel the anti-tipper upwards until it engages and the front release button Ⓑ snaps into the frame hole.

WARNING!
Risk of overturning
– Always advise the user if you deactivate the anti-tippers.

There is a red label on the housing of the anti-tipper, this label shows when the anti-tipper is inactivated. When the anti-tipper is correctly activated, the red label will be concealed.

Setting the height

WARNING!
Risk of overturning
– The adjustments of the anti-tipper must be carried out by a qualified technician.

This adjustment is required with reference to the position and diameter of the rear wheel as well as the user conditions and his particular safety limits.

Make sure that the anti-tipper device is fitted correctly on each side (if applicable), the spring button Ⓐ and fixation Ⓒ must be locked into position.

3.10 Seat cushion

A suitable cushion is recommended to provide an even pressure distribution on the seat.

CAUTION!
Risk of instability
Adding a cushion to the seat will raise your height above the ground and can affect your stability in all directions. If a cushion is changed it may also change the user's stability.
– If the thickness of the cushion is changed, a complete set up of the wheelchair need to be done by a qualified technician.
– We recommend to use an Invacare or Matrx cushion with anti-slip base cover in order to prevent sliding.

4 Options

4.1 Transit version

The transit version is designed to be driven only by the attendant. To facilitate sideways transfers and save space, the wheelchair is equipped with rear wheels of 305 mm (12”).

ℹ The distance between the brake shoe and the tyre can be adjusted. The adjustment must be carried out by a qualified technician.

The manual brakes (optional drum brake) are only accessible to the attendant; operate the handles Ⓐ to lock or Ⓑ to unlock the wheelchair in parking position.

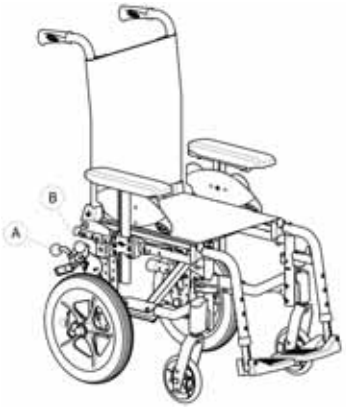

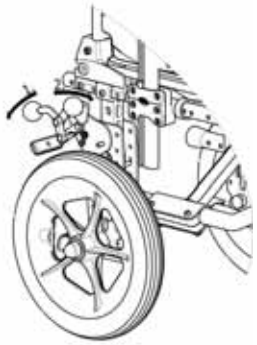

1. To engage the brake, push the brake lever Ⓑ downwards as far as possible.
2. To disengage the brake, pull or push the brake lever Ⓑ upwards.

For drum brake, please read section *6.2 Braking during use, page 35*.

ℹ Transit version equipped with a reclining backrest is always fitted with anti-tippers.

4.2 Posture belt

The wheelchair can be equipped with a posture belt. It prevents the user from sliding downward in the wheelchair or from falling out of the wheelchair. The posture belt is not a positioning device.

WARNING!
Risk of serious injury / strangulation
A loose belt can allow the user to slip down and create a risk of strangulation.
- The posture belt should be mounted by a qualified technician and fitted by the responsible prescriber.
- Always make sure that the posture belt is tightly fitted across the lower pelvis.
- Each time the posture belt is used, check if it fits properly. Changing the seat and/or backrest angle, the cushion and even your clothes influence the fit of the belt.

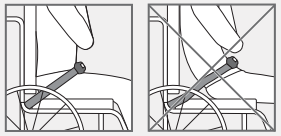

WARNING!
Risk of serious injury during transport
In a vehicle, a user in his wheelchair must be secured by a safety belt (3-point belt). A posture belt only is not sufficient as a personal restraint device.
- Use the posture belt as a complement, but not as a substitute to the 3-point safety belt, when transporting the wheelchair user in a vehicle.

Closing and opening the posture belt

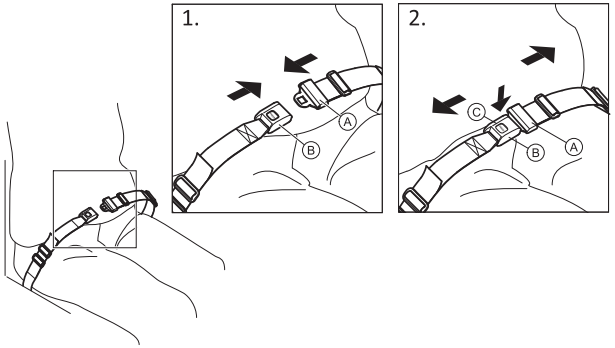

Ensure that you are sitting fully back in the seat and that the pelvis is as upright and symmetrical as possible.

1. To close, push the catch Ⓐ into the buckle clasp Ⓑ.
2. To open, push the PRESS button Ⓒ and pull the catch Ⓐ out of the buckle clasp Ⓑ.

Adjusting the length

The posture belt has the good length, when there's just sufficient space for a flat hand between body and belt.

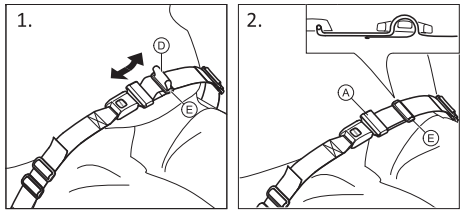

1. Shorten or extend the loop Ⓓ as required.
2. Thread loop Ⓓ through catch Ⓐ and plastic buckle Ⓔ until the loop is flat.

If this adjustment is not sufficient, it might be required to re-fit the posture belt at the fixations.

Fitting the posture belt at the fixations

CAUTION!
- Thread the belt loop through both plastic buckles to avoid the belt from loosening.
- Do the adjustments on both sides equally, so that the buckle clasp remains in a central position.
- Make sure that the belts do not get caught in the spokes of a rear wheel.

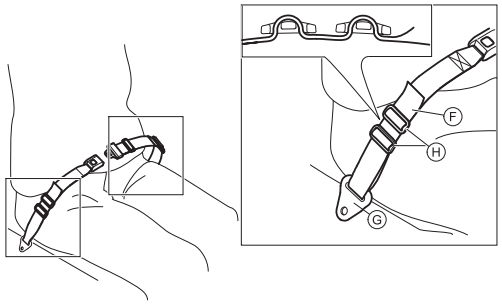

1. Thread the loop Ⓕ through the fixation on the chair Ⓖ and then through BOTH plastic buckles Ⓗ.

4.3 Headrest

The height; depth and angle adjustments are operated by the combination of the headrest scissor brackets position.

Height; depth and angle adjustment

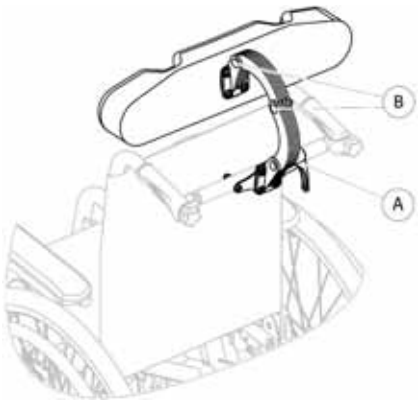

1. Loosen the handle Ⓐ.
2. Loosen the screws Ⓑ with 5 mm Allen key.
3. Adjust the height; depth and angle of the headrest by moving the scissor brackets to the desired position.
4. Re-tighten the handle Ⓐ and the screws Ⓑ (5–6 Nm).

4.4 Stabilizer kit

Stabilizer kit prevents the active child from tipping forwards when propelling, climbing up or down the foot plates and to improve general stability.

WARNING!
Risk of tipping forwards
– The installation of the Stabilizer kit must be carried out by a qualified technician.

4.5 Tipper aid

With the tipper aid, an assistant can tip the wheelchair more easily, in order to navigate steps for example.

WARNING!
Risk of overturning
– Ensure that the tipper aid does not project beyond the external diameter of the rear wheel.

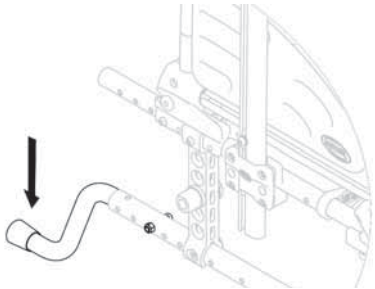

1. Hold the wheelchair by the push handles.
2. Press the tipper aid with your foot and hold the wheelchair in the tipped position until you have overcome the obstacle.

4.6 Table tray

WARNING!
Risk of tipping / injury
– Max load on the table: 5 kg

CAUTION!
Risk of discomfort / minor bruises
– Make sure that the elbows of the user are placed on the table when pushing the wheelchair. If the elbows protrudes from the table while pushing the wheelchair, there is a risk of discomfort or minor bruises.

Depth adjustment

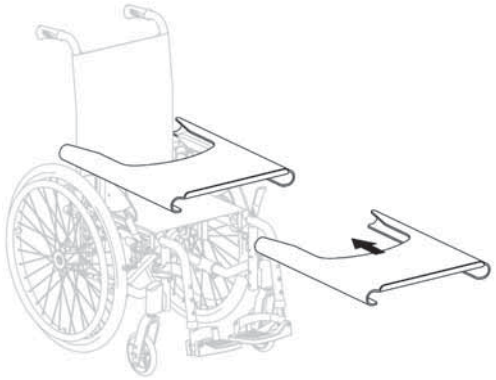

Slide the table tray forwards or backwards to adjust to the required depth.

CAUTION!
Risk of discomfort
– When adjusting the depth of the table, make sure not to squeeze the stomach of the user.

4.7 Swiveling, table tray

WARNING!
Risk of tipping / injury
– Max load on the table: 3,5 kg

CAUTION!
Risk of pinching fingers
There is a mechanism below the table tray where you could trap your fingers.
– Be careful when adjusting the tray or when using the swing-away function.

The half tray can be adjusted in depth and swung away for the front transfer of the user.

Mounting the tray and adjusting the depth

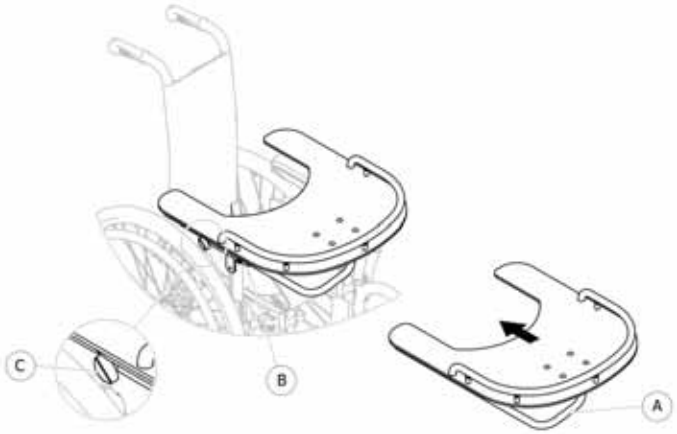

1. Insert the tube Ⓐ of the table tray into its support Ⓑ below the arm pad.
2. Slide the table tray forwards or backwards to adjust to the required depth.
3. Firmly tighten the knob Ⓒ.

CAUTION!
Risk of discomfort
– When adjusting the depth of the table, make sure not to squeeze the stomach of the user.

Adjusting sideways

The table tray have to be adjusted sideways to fit the seat width of the chair and the user posture.

CAUTION!
Risk of discomfort
– The sideways adjustment of the table tray must be carried out by a qualified technician.

4.8 Transfer kit wheels

If your wheelchair is too wide for certain applications, e.g. trains/aeroplanes, narrow passageways, narrow doors, the transfer kit wheels can be used.

WARNING!
– When using transfer kit wheels, the parking brakes no longer have any effect and you cannot control your wheelchair via the handrims.

The transfer kit wheels are attached directly to the rear frame as an option.

WARNING!
Risk of tipping sidewards
– Make sure that anti-tippers with transfer kit wheels are installed on both sides of the wheelchair.

Switching to Transfer kit wheels

1. Activate the anti-tippers with transfer kit wheels on both sides,
   → *3.9 Anti-tipper, page 24*.
2. With the help of an assistant, remove the rear wheel,
   → *7.4 Removing and fitting the rear wheels, page 45*
   and lower the wheelchair to the transfer kit wheel.
3. Repeat the process on the other side.

Switching from Transfer kit wheels to rear wheels

1. With the help of an assistant, fit the rear wheel back onto the removable axle,
   → *7.4 Removing and fitting the rear wheels, page 45*
   and lower the wheelchair to the rear wheel.
2. Repeat the process on the other side.

4.9 Air pump

The air pump is fitted with a universal valve connection.

1. Remove the dust cap from the valve connection.
2. Push the valve connection onto the open valve on the wheel and pump the wheel up.

4.10 Passive illumination

You can attach reflectors to the rear wheels.

5 Setup

5.1 Safety information

CAUTION!
Risk of injury
– Before using the wheelchair, check its general condition and its main functions, *8.2 Maintenance Schedule, page 52*.

Your authorized provider will supply your wheelchair ready for use. Your provider will explain the main functions and ensure that the wheelchair meets your needs and requirements.

Adjustments of the axle position and the castor supporters must be carried out by a qualified technician.

If you receive your wheelchair folded, read section *7.2 Folding and unfolding the wheelchair, page 43*.

6 Using the wheelchair

6.1 Safety information

WARNING!
Risk of accidents
Uneven tyre pressure can have a huge effect on handling.
– Check the tyre pressure before each journey.

WARNING!
Risk of falling out of the wheelchair
When using too small front wheels the wheelchair could get stuck at curbs or in floor grooves.
– Make sure that the front wheels are suitable for the surface you're driving on.

CAUTION!
Risk of crushing
There may be a very small gap between the rear wheel and the mudguard or armpad with the risk that you could trap your fingers.
– Ensure that you always propel your wheelchair using the handrims only.

CAUTION!
Risk of crushing
There may be a very small gap between the rear wheel and the parking brake with the risk that you could trap your fingers.
– Ensure that you always propel your wheelchair using the handrims only.

6.2 Braking during use

Whilst you are moving, you brake by transferring force to the handrim with your hands.

WARNING!
Risk of overturning
If you engage the parking brakes while you are moving, the direction of movement can become uncontrollable and the wheelchair may stop suddenly, which can lead to a collision or to you falling out.
– Never engage the parking brakes while you are moving.

WARNING!
Risk of falling out of the wheelchair
If the wheelchair is rapidly decelerated by an assistant pulling at the push handles, the user may fall out of the wheelchair.
– Always apply the posture belt if present.
– Make sure your assistant is qualified in transferring occupied wheelchairs.
– Operate the two brakes simultaneously and do not take slopes exceeding 7° to ensure perfect control of the wheelchair steering.
– Always use the parking brakes to secure the wheelchair during short or long stops.

CAUTION!
Risk of burning your hands
If you brake for a long time, a lot of frictional heat is produced at the handrims (especially anti slip handrims).
– Wear suitable gloves.

1. Hold the handrims and press evenly with both hands until the wheelchair stops.

Braking with an assistant

With an assistant's brake (drum brake) an assistant can brake the wheelchair while it is moving. The assistant's brake can also be used as a parking brake.

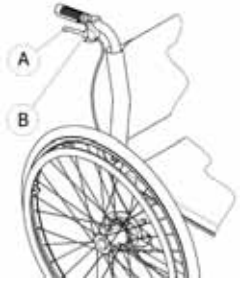

1. To brake, pull the brake lever Ⓐ on the push handle.
2. To park, pull the brake lever firmly until the safety lever Ⓑ engages.
3. To release, pull the brake lever and release the safety lever underneath the brake lever.

6.3 Move to/from the wheelchair

WARNING!
Risk of overturning
There is a high risk of overturning during the transfer.
– Only get in and out without assistance if you are physically able to do so.
– When transferring, position yourself as far back as possible in the seat. This will prevent damaged upholstery and the possibility of the wheelchair tipping forward.
– Make sure that both castors are facing straight to the front.

WARNING!
Risk of overturning
The wheelchair could tip forwards if you stand on the footrest.
– Never stand on the footrest when getting in and out.

CAUTION!
If you disengage or damage the brakes the wheelchair could roll away out of control.
– Do not support yourself on the brakes when getting in and out.

IMPORTANT!
The mudguards and armrests could become damaged.
– Never sit on the mudguards or armrests when getting in and out.

1. Propel the wheelchair as near as possible to the seat that you want to move to.
2. Engage the parking brakes.
3. Remove the armrests or move them upwards out of the way.
4. Detach the leg rests or swing them outwards.
5. Place your feet on the ground.
6. Hold the wheelchair and, if necessary, also hold a fixed object in the vicinity.
7. Move slowly to chair.

6.4 Driving and Steering the Wheelchair

You drive and steer the wheelchair using the handrims. Before driving without an assistant you must find your wheelchair's tipping point.

WARNING!
Risk of Tipping
The wheelchair can tip backwards if it is not fitted with an antitipper. When finding the tipping point, an assistant must stand immediately behind the wheelchair to catch it if it tips over.
– To prevent tipping, install an antitipper device.

WARNING!
Risk of Tipping
The wheelchair can tip forwards.
– When setting up your wheelchair, test its behavior in terms of tipping forward and adjust your driving style accordingly.

CAUTION!
A heavy load hanging on the backrest can affect the wheelchair's centre of gravity.
– Change your driving style accordingly.

Finding the Tipping Point

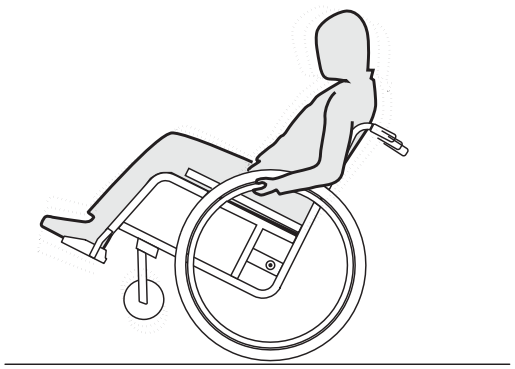

1. Release the brake.
2. Roll backwards a short distance, grasp both handrims firmly and push forwards with a slight kick.
3. The shift in weight and steering in opposite directions with the handrims will enable you to identify the tipping point.

6.5 Negotiating steps and kerbs

WARNING!
Risk of overturning
When negotiating steps you could lose your balance and tip the wheelchair over.
– Always approach steps and kerbs slowly and carefully.
– Do not go up or down steps that are higher than 25 cm.

CAUTION!
An activated anti-tipper prevents the wheelchair from tipping backwards.
– Deactivate the anti-tipper before going up or down steps or kerbs.

WARNING!
Risk of injury to the assistant and damage to the wheelchair
Tilting the chair with a heavy user can hurt the assistant's back and damage the chair.
– Make sure to be able to safely control the wheelchair with a heavy user before performing a tilting maneuver.

Going down a step with an assistant

1. Move the wheelchair right up to the kerb and hold the handrims.
2. The assistant should hold both push handles, place one foot on the tipper aid (if installed) and tilt the wheelchair backwards so that the front wheels lift off the ground.
3. The assistant should then hold the wheelchair in this position, push it carefully down the step and then tilt it forwards until the front wheels are back on the ground.

Going up a step with an assistant

WARNING!
Risk of serious injuries
Going up steps and kerbs frequently can result in earlier than expected fatigue break of the wheelchair backrest. The user might fall out of the wheelchair.
– Always use a tipper aid when going up steps or kerbs.

1. Move the wheelchair backwards until the rear wheels touch the kerb.
2. The assistant should tilt the wheelchair using both push handles so that the front wheels lift off the ground, then pull the rear wheels over the kerb until the front wheels can be placed back on the ground.

Going down a step without an assistant

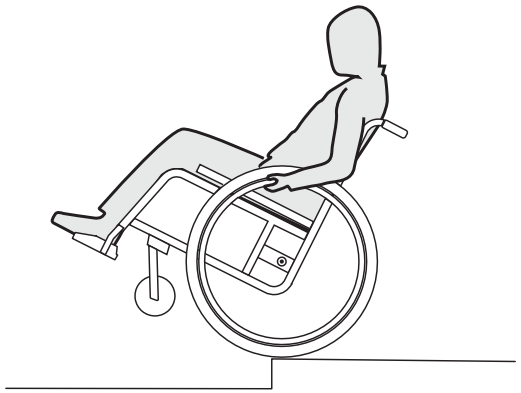

WARNING!
Risk of tipping
When going down a step without an assistant you could tip over backwards if you cannot control your wheelchair.
– First learn how to go down a step with an assistant.
– Learn how to balance on the rear wheels, *6.4 Driving and Steering the Wheelchair, page 37*.

1. Move the wheelchair right to the kerb, lift the front wheels and keep the wheelchair balanced.
2. Now slowly roll both rear wheels over the kerb. While doing this, hold the handrims firmly with both hands until the front wheels are back on the ground.

6.6 Going up and down stairs

WARNING!
Risk of overturning
When negotiating stairs you could lose your balance and overturn your wheelchair.
– Always use two assistants when negotiating stairs with more than one step.

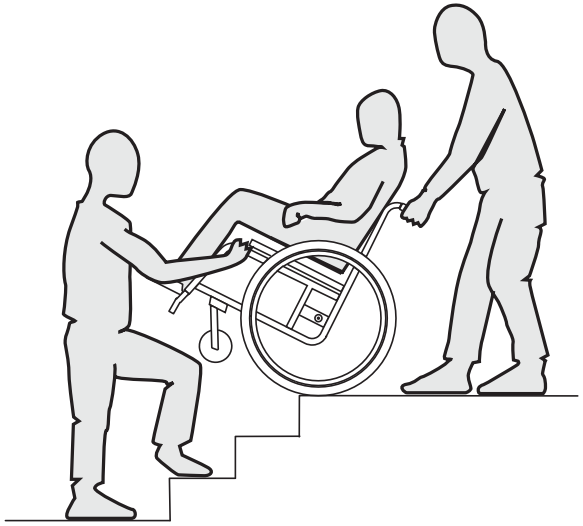

1. You can go up and down stairs by taking them one step at a time, as described above. The first assistant should stand behind the wheelchair holding the push handles. The second assistant should hold a solid part of the front frame to steady the wheelchair from the front.

6.7 Negotiating Ramps and Slopes

WARNING!
Risk due to wheelchair being out of control
When negotiating slopes or gradients your wheelchair could tip backwards, forwards or sideways.
- Always have an assistant behind the wheelchair when approaching long slopes.
- Avoid lateral slopes.
- Avoid slopes of more than 7°.
- Avoid jerking when changing direction on a slope.

CAUTION!
Your wheelchair could run away even on slightly sloping ground if you do not control it using the handrims.
- Use the parking brakes if your wheelchair is stationary on sloping ground.

Going up slopes

To go up a slope, you must create some momentum, keep up the momentum and control the direction at the same time.

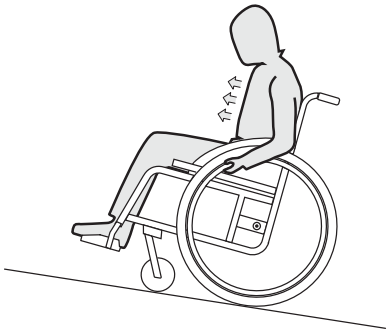

1. Bend your upper body forwards and propel the wheelchair with quick, powerful strokes on both handrims.

Going down slopes

When going down slopes, it is important to control your direction and particularly your speed.

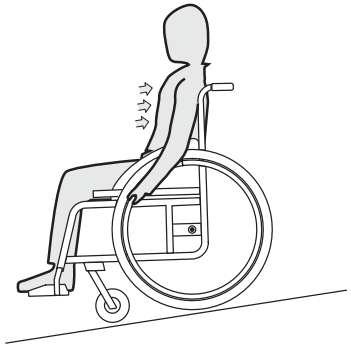

1. Lean back and carefully allow the handrims to run through your hands. You should be able to stop the wheelchair at any time by gripping the handrims.

CAUTION!
Risk of burning your hands.
If you brake for a long time, a lot of frictional heat is produced at the handrims (especially anti slip handrims).
– Wear suitable gloves.

6.8 Stability and balance when seated

Some everyday activities and actions require you to lean forwards, sideways or backwards out of the wheelchair. This has a major effect on the wheelchair's stability. To keep your balance at all times, proceed as follows:

Leaning forwards

WARNING!
Risk of falling out
If you lean forwards out of the wheelchair you could fall out of it.
– Never bend too far forwards and do not shift forwards in your seat to reach an object.
– Do not bend forwards between your knees to pick up something off the floor.

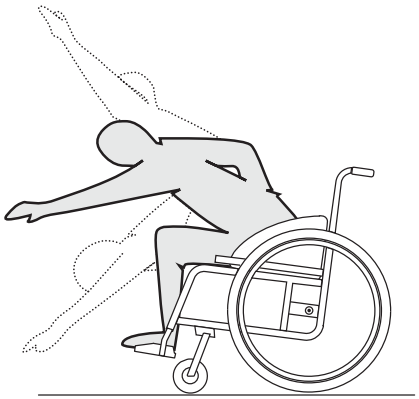

1. Point the front wheels forwards. (To do this, move your wheelchair forwards slightly then back again.)
2. Apply both parking brakes.
3. When leaning forwards your upper body must remain over the front wheels.

Reaching backwards

WARNING!
Risk of falling out
If you lean too far backwards you could tip your wheelchair over.
– Do not lean out over the backrest.
– Use an antitipper device.

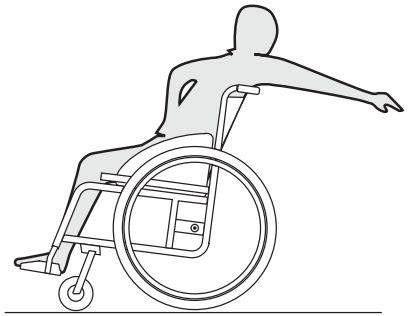

1. Point the front wheels forwards. (To do this, move your wheelchair forwards slightly then back again.)
2. Do not apply the parking brakes.
3. When reaching backwards do not reach so far that you have to change your sitting position.

7 Transport

7.1 Safety information

WARNING!
Risk of injury if the wheelchair is not properly secured
In the event of an accident, braking manoeuvre, etc. you may suffer serious injuries from flying wheelchair parts.
– Always remove the rear wheels when transporting the wheelchair.
– Firmly secure all wheelchair components in the means of transport to prevent them from coming loose during the journey.

IMPORTANT!
Excessive wear and abrasion could affect the strength of load-bearing parts.
– Do not pull your wheelchair across abrasive surfaces without the wheels fitted (e.g. pulling the frame over tarmac).

7.2 Folding and unfolding the wheelchair

Folding the wheelchair

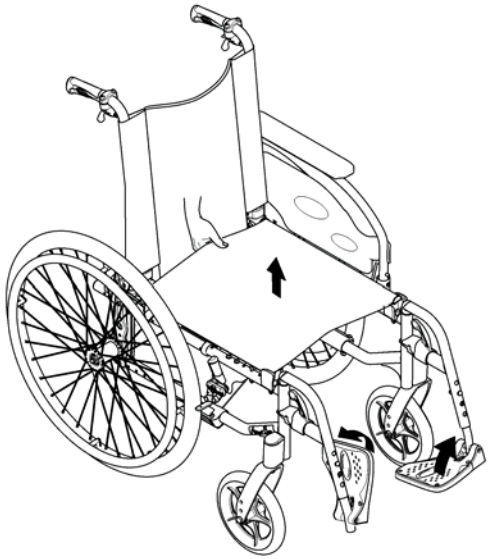

1. Remove the seat cushion, if present.
2. Fold the backbrace, if present.
3. Fold the foot plates upwards.
4. Pull the seat cover upwards.

Unfolding the wheelchair

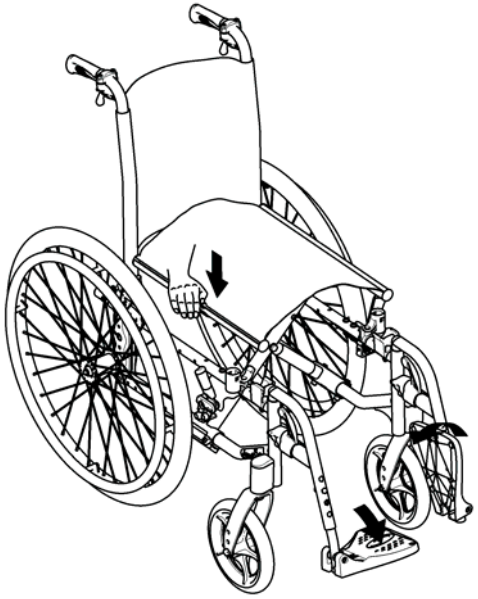

CAUTION!
Risk of getting fingers caught
There is a risk of getting your fingers caught between the seat edge and the frame.
– Never clasp the seat edge with your fingers.

1. Position the wheelchair next to you.
2. Tilt the wheelchair, if possible, gently towards you.
3. With your hand flat, press the seat edge closest to you, so that the seat surface flattens out.
4. Put the wheelchair back completely on the floor and check that the seat edges on both sides are in the guide components.
5. Fold the foot plates down.
6. Unfolding the backbrace, if present.

7.3 Lifting the wheelchair

IMPORTANT!
– Never lift the wheelchair by removable parts (armrests, footrests).
– Ensure the backrest posts are securely in place.

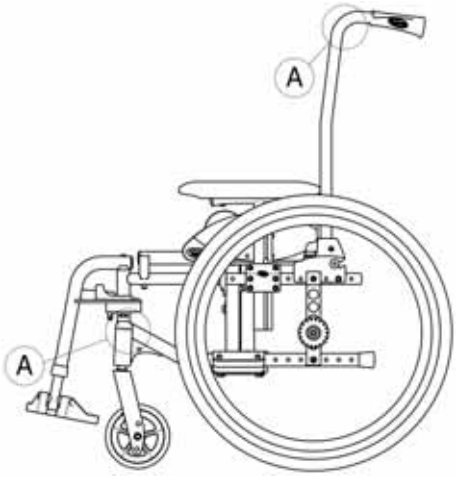

1. Fold the wheelchair, see chapter *7.2 Folding and unfolding the wheelchair, page 43*.
2. Always lift the wheelchair by gripping the frame at points Ⓐ.

7.4 Removing and fitting the rear wheels

WARNING!
Risk of overturning
If the removable axle of a rear wheel is not fully engaged, the wheel can become loose during use. This can lead to overturning.
– Always ensure that the removable axles are fully engaged whenever you fit a wheel.

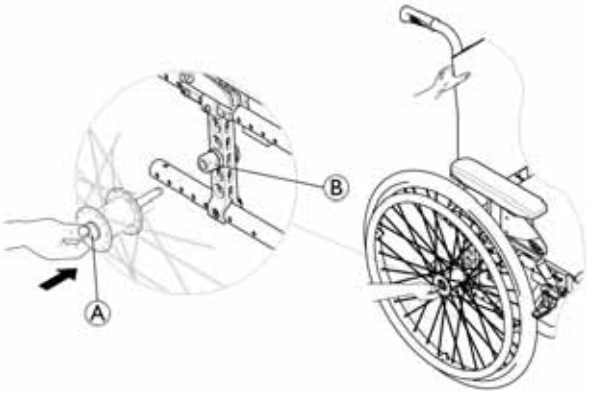

Removing the rear wheels

1. Release the brakes.
2. With one hand, hold the wheelchair upright.
3. With the other, hold the wheel through the external spoke rim around the wheel hub.
4. Using your thumb, press the removable axle button Ⓐ. Keep it pressed and pull the wheel out of the adapter sleeve Ⓑ.

Fitting the rear wheels

1. Release the brakes.
2. With one hand, hold the wheelchair upright.
3. With the other, hold the wheel through the external spoke rim around the wheel hub.
4. Using your thumb, press the removable axle button and hold it down.
5. Push the axle into the adapter sleeve Ⓑ up to the stop.
6. Release the removable axle button and make sure that the wheel is secure.

7.5 Transporting the Mobility Device without Occupant

CAUTION!
Risk of injury
– If you are unable to fasten your mobility device securely in a transport vehicle, Invacare recommends that you do not transport it.

Your mobility device may be transported without restrictions, whether by road, rail or by air. Individual transport companies have, however, guidelines which can possibly restrict or forbid certain transport procedures. Please ask the transport company regarding each individual case.

- Invacare strongly recommends securing the mobility device to the floor of the transporting vehicle.

7.6 Transporting the occupied wheelchair in a vehicle

Even when the wheelchair is properly secured and the following rules are met, injuries to passengers may occur in a collision or sudden stop. Therefore Invacare strongly recommends transferring the wheelchair user to the vehicle seat with the seat belt on. Do not make alterations or substitutions to points of the wheelchair (structure, frame or parts) without the written consent of Invacare Corporation. The wheelchair has been successfully tested according to the requirements of ISO 7176–19 (Frontal impact).

WARNING!
Risk of serious injury or death
To use the wheelchair as a seat in a vehicle the backrest height minimum must be at least 400 mm.

To transport the wheelchair with user in a vehicle, a restraint system must be installed in the vehicle. Wheelchair tie-downs and occupant restraint systems must be approved according to ISO 10542-2. Contact your local Invacare authorized provider for more information on getting and installing an approved and compatible restraint system.

WARNING!
If, for some reason, it is impossible to transfer the wheelchair user to a vehicle seat, the wheelchair can be used as a seat in a vehicle if the following procedures and regulations are followed. A transportation kit (optional) have to be fitted on the chair for such a purpose.
- The wheelchair must be secured in the vehicle with a 4-point wheelchair restraint system.
- The user must wear a 3-point passenger restraint system secured to the vehicle.
- The user could be additionally secured with a posture belt in the wheelchair.

WARNING!
Safety restraint devices must only be used when the wheelchair user's weight is 22 kg or more (ISO-7176-19).
- Do not use the wheelchair as a seat in a vehicle when the user weight is lower than 22 kg.

WARNING!
- Before journey contact transporter and request information about the capability for the below required equipment.
- Make sure there is sufficient free space around the wheelchair and user to avoid the user making contact with other vehicle occupants, unpadded parts of the vehicle, wheelchair options or anchor points of the restraint system.

WARNING!
- Make sure the tie-down points at the wheelchair are not damaged and that the parking brakes are fully functional.
- It's recommended to use puncture-proof tyres during transport to avoid brake problems due to reduced tyre pressure.

WARNING!
Injury or damage may occur from wheelchair components or options loosened during a collision or sudden stop.
- Ensure all removable or detachable components and accessories are removed from the wheelchair and securely stored in the vehicle.
- It is essential to have your wheelchair checked by a qualified technician after an accident, collision etc.

Ramps and Slopes:

WARNING!
Risk of injury
The wheelchair can move forward / backward uncontrollably by mistake.
- Never leave the user unattended when transporting the wheelchair up or down ramps or slopes.

Therefore Invacare strongly recommends transferring the wheelchair user to the vehicle with the posture belt on.

IMPORTANT!
- Refer to the user manuals supplied with the restraint systems.
- The following illustrations may differ depending on the restraint system supplier.

The choice of wheelchair configuration (seat width and depth, wheelbase) influences maneuverability and access to motor vehicles.

Securing the wheelchair with a 4-point restraint system

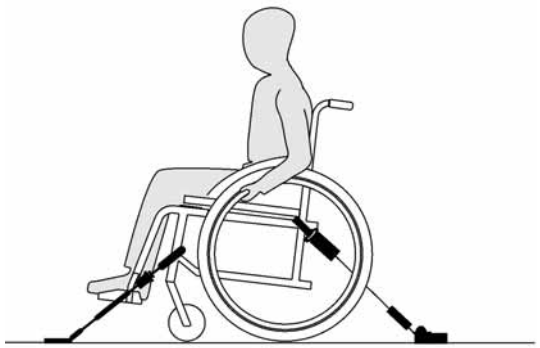

WARNING!
– Place the wheelchair with the user forward-facing in direction of vehicle travel.
– Engage the wheelchair parking brakes.
– Activate anti-tipper (if installed).

The wheelchair tie-down positions where the restraint system straps must be placed are marked with snap hook symbols (see following figures and section *2.3 Labels and symbols on the product, page 9*).

1. Using the front and rear straps of the 4-point restraint system, secure the wheelchair to the vehicle mounted rails. Refer to the user manual supplied with 4-point restraint system.

Front side tie-down positions for belt straps:

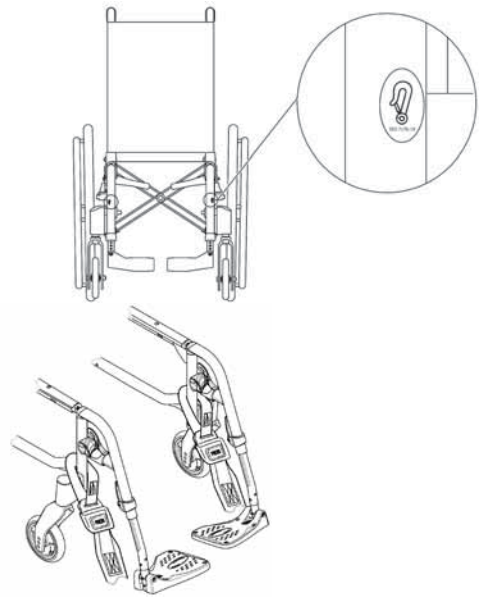

1. Attach the front straps above the castor supporters as shown in the figure above (see location of the attachment labels).
2. Attach front straps to the rail system referring to best practice recommended instructions from the safety belt manufacturer.
3. Disengage parking brakes and apply tension front straps by pulling the wheelchair backwards from the rear.
4. Re-engage parking brakes.

Rear side tie-down positions for snap hooks:

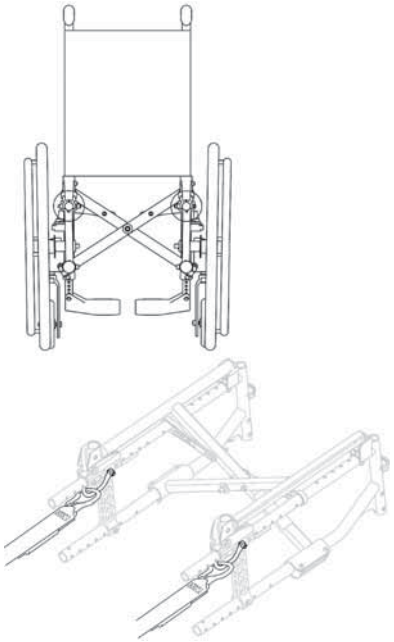

1. Attach the snap hooks to the orange rings as shown in the two figures above.
2. Attach rear straps to the rail system referring to best practice recommended instructions from the safety belt manufacturer.
3. Tighten the straps.

IMPORTANT!
– Make sure that the snap hooks are covered with slip resistant material to avoid laterally slipping on the axle.

IMPORTANT!
– Check the plungers are fully engaged on both sides and located in the same position of the cut-out section of the rail.
– Make sure that the angle between the rails and the straps lies between 40° and 45°.

The access to the rear orange rings might be more difficult in some configurations, in particular the Transit version (rear wheel size 305 mm/12”) combined with narrow seat width (< 280 mm). In such cases, the snap hooks can still be attached to the orange rings but disengaging temporarily the brakes may help in getting more space. Make sure the brakes are fully engaged after having the snap in place and apply it one side after the other so that the chair remains secured at all time.

Fit posture belt

WARNING!
The posture belt could be used in addition to but never as a substitute for an approved passenger restraint system (3-point belt).

1. Adjust posture belt to fit the wheelchair occupant, see section *4.2 Posture belt, page 27*.

Fastening the 3-point passenger restraint system

IMPORTANT!
The illustration above may differ depending on the restraint system supplier.

WARNING!
- Ensure the 3-point passenger restraint system fits as tightly across the user's body as possible without discomfort and no part is twisted.
- Ensure the 3-point passenger restraint system is not held away from the user's body by parts of the wheelchair such as armrests or wheels etc.
- Ensure the user restraint has a clear path from the user to the anchor point without interference by any part of the vehicle, wheelchair, seating or option.
- Ensure the lap belt fits snugly over the occupant’s pelvis and is not allowed to ride up into the abdominal area.
- Ensure the user is able to reach the release mechanism unaided.

1. Attach the 3-point passenger restraint system referring to the user manual supplied with your 3-point restraint system.

IMPORTANT!

– Apply the pelvic belt restraint of the 3-point belt restraint low across the pelvis so that the angle of the posture belt is within the preferred zone (A) of 30° to 75° to the horizontal. A steeper angle is preferred, but never exceeding 75°.

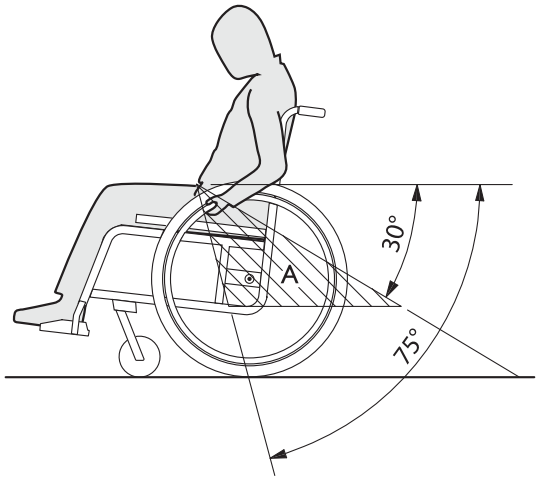

8 Maintenance

8.1 Safety information

WARNING!
Some materials deteriorate naturally over time. This could result in damage to wheelchair components.
– Your wheelchair should be checked by a qualified technician at least once a year or if it has not been used for a long period.

Packaging for return
The wheelchair shall be sent to the authorized provider in an appropriate packaging to avoid damage during the shipment.

8.2 Maintenance Schedule

To ensure safe and reliable operation, carry out the following visual checks and maintenance regularly or have it carried out by another person.

	weekly	monthly	annually
Check the tyre pressure	x		
Check that rear wheels are seated correctly	x		
Check posture belt	x		
Check the folding mechanism		x	
Check the castors		x	
Check bolts		x	
Check spokes		x	
Check parking brakes		x	
Have wheelchair checked by a qualified technician			x

General visual check

1. Examine your wheelchair for loose parts, cracks or other defects.
2. If you find anything, stop using your wheelchair immediately and contact an authorized provider.

Check the tyre pressure

1. Check the tyre pressure, see section “Tyres” for more information.
2. Inflate the tyres to the required pressure.
3. Check the tyre tread at the same time.
4. If necessary, change the tyres.

Check that rear wheels are seated correctly

1. Pull on the rear wheel to check that the removable axle is seated correctly. The wheel should not come off.
2. If the rear wheels are not engaged properly, remove any dirt or deposits. If the problem persists, have the removable axles re-fitted by a qualified technician.

Check posture belt

1. Check that the posture belt is adjusted correctly.

> **IMPORTANT!**
> – Loose posture belts must be adjusted by an authorized provider.
> – Damaged posture belts must be replaced by a qualified technician.

Check the folding mechanism

1. Check that the folding mechanism is easy operating.

Check the castors

1. Check that the castors turn freely.
2. Remove any dirt or hair from the castor bearings.
3. Faulty or worn out castors must be replaced by a qualified technician.

Check the bolts

Bolts can work loose through constant use.

1. Check that the bolts are tight securely and without free play (on the footrest, castor, castor housing, seat cover, sides, backrest, frame, seat module).
2. Tighten any loose bolts with the suitable torque. Therefore refer to the Service Manual, available on the internet at www.invacare.eu.com.

> **IMPORTANT!**
> Self-locking screws/nuts or thread-locking adhesive are used for several connections. If these are loosened, they must be replaced by new self-locking screws/nuts or they must be secured using new thread-locking adhesive.
> – Self-locking screws/nuts must be replaced by a qualified technician.

Check the spoke tension

The spokes should not be loose or distorted.

1. Loose spokes must be tightened by a qualified technician.
2. Broken spokes must be replaced by a qualified technician.

Check the parking brakes

1. Check that the parking brakes are positioned correctly. The brake is set correctly if the brake shoe depresses the tyre by a few millimeters when the brake is engaged.
2. If you find that the setting is not correct, have the brakes correctly adjusted by a qualified technician.

IMPORTANT!
The parking brakes must be reset after replacing the rear wheels or changing their position.

Checking after a heavy collision or blow

IMPORTANT!
The wheelchair can sustain visibly undetectable damage as a result of a heavy collision or hard blow.
– It is essential to have your wheelchair checked by a qualified technician after a heavy collision or hard blow.

Repairing or changing an inner tube

1. Remove the rear wheel and release any air from the inner tube.
2. Lift one tyre wall away from the rim using a bicycle tyre lever. Do not use sharp objects such as a screwdriver which could damage the inner tube.
3. Pull the inner tube out of the tyre.
4. Repair the inner tube using a bicycle repair kit or, if necessary, replace the tube.
5. Inflate the tube slightly until it becomes round.
6. Insert the valve into the valve hole on the rim and place the tube inside the tyre (the tube should lie right round the tyre with no creases).
7. Lift the tyre wall over the edge of the rim. Start close to the valve and use a bicycle tyre lever. When doing this, check all the way round to ensure that the inner tube is not trapped between the tyre and the rim.
8. Inflate the tyre to the maximum operating pressure. Check that no air is escaping from the tyre.

Spare parts

All spare parts may be obtained from an Invacare authorized provider.

8.3 Cleaning and Disinfection

8.3.1 General Safety Information

CAUTION!
Risk of Contamination
– Take precautions for yourself and use appropriate protective equipment.

IMPORTANT!
Wrong fluids or methods can harm or damage the product.
– All cleaning agents and disinfectants used must be effective, compatible with one another and must protect the materials they are used to clean.
– Never use corrosive fluids (alkalines, acid etc.) or abrasive cleaning agents. We recommend an ordinary household cleaning agent such as dishwashing liquid, if not specified otherwise in the cleaning instructions.
– Never use a solvent (cellulose thinner, acetone etc.) that changes the structure of the plastic or dissolves the attached labels.
– Always make sure that the product is completely dried before taking it into use again.

For cleaning and disinfection in clinical or long-term care environments, follow your in-house procedures.

8.3.2 Cleaning Intervals

IMPORTANT!
Regular cleaning and disinfection enhances smooth operation, increases the service life and prevents contamination.
Clean and disinfect the product
– regularly while it is in use,
– before and after any service procedure,
– when it has been in contact with any body fluids,
– before using it for a new user.

8.3.3 Cleaning

IMPORTANT!
Dirt, sand and seawater can damage the bearings and steel parts can rust if the surface is damaged.
– Only expose the wheelchair to sand and seawater for short periods and clean it after every trip to the beach.
– If the wheelchair is dirty, wipe off the dirt as soon as possible with a damp cloth and dry it carefully.

1. Remove any options fitted (only options which do not require tools).
2. Wipe down the individual parts using a cloth or soft brush, ordinary household cleaning agents (pH = 6 - 8) and warm water.
3. Rinse the parts with warm water.
4. Thoroughly dry the parts with a dry cloth.

Car polish and soft wax can be used on painted metal surfaces to remove abrasions and restore gloss.

Cleaning upholstery

For cleaning upholstery refer to the instructions on the labels of the seat, cushion and backrest cover.

If possible, always overlap hook and loop strips (the self-gripping parts) when washing, to minimize lint and thread build-up on hook strips and prevent damage to upholstery fabric by these.

8.3.4 Disinfection

The wheelchair may be disinfected by spraying or wiping with tested, approved disinfectants.

Spray a soft cleaning and disinfecting product (bactericidal and fungicide meeting the EN1040 / EN1276 / EN1650 standards) and follow the instructions given by the manufacturer.

1. Wipe down all generally accessible surfaces with a soft cloth and ordinary household disinfectant.
2. Allow the product to air-dry.

9 Troubleshooting

9.1 Safety information

Faults may arise as a result of daily use, adjustments or changing demands on the wheelchair. The table below shows how to identify and repair faults.

Some of the actions listed must be carried out by a qualified technician. These are indicated. We recommend that *all* adjustments are carried out by a qualified technician.

CAUTION!

– If you notice a fault with your wheelchair, e.g. a significant change in handling, stop using your wheelchair immediately and contact your provider.

9.2 Identifying and repairing faults

Fault	Possible cause	Action
The wheelchair does not travel in a straight line	Incorrect tyre pressure on one rear wheel	Correct tyre pressure, *11.3 Tyres, page 61*
	One or more spokes broken	Replace faulty spoke(s), → qualified technician
	Spokes tightened unevenly	Tighten loose spokes, → qualified technician
	Castor bearings are dirty or damaged	Clean the bearings or replace the castor, → qualified technician
The wheelchair tips backwards too easily	Rear wheels are mounted too far forwards	Mount the rear wheels further back, → qualified technician
	Back angle too large	Reduce the backrest angle, → qualified technician
	Seat angle too large	Mount the castor upper on the front fork, → qualified technician Select a smaller front fork, → qualified technician
The brakes are gripping poorly or asymmetrically	Incorrect tyre pressure in one or both rear tyres	Correct tyre pressure, *11.3 Tyres, page 61*
	Brake setting incorrect	Correct the brake setting, → qualified technician
Rolling resistance is very high	Tyre pressure in rear tyres is too low	Correct tyre pressure, *11.3 Tyres, page 61*
	Rear wheels not parallel	Ensure the rear wheels are parallel, → qualified technician
The castors wobble when moving fast	Too little tension in castor bearing block	Tighten the nut on the bearing block axle slightly, → qualified technician
	Castor has worn smooth	Change castor, → qualified technician
The castor is stiff or stuck	Bearings are dirty or faulty	Clean the bearings or replace the castor, → qualified technician
The wheelchair is very difficult to unfold	Backrest cover is too tight	Loosen the hook and loop strips of the backrest cover a little, *3.5.2 Adjustable Backrest Cover, page 14*

10 After Use

10.1 Storage

IMPORTANT!
Risk of damage to the product
– Do not store the product near heat sources.
– Never store other items on top of the wheelchair.
– Store the wheelchair indoors in a dry environment.
– Refer to temperature limitation in chapter *11 Technical Data, page 59*.

After long-term storage (more than four months) the wheelchair must be inspected in accordance to chapter *8 Maintenance, page 52*.

10.2 Disposal

Be environmentally responsible and recycle this product through your recycling facility at its end of life.

Disassemble the product and its components, so the different materials can be separated and recycled individually.

The disposal and recycling of used products and packaging must comply with the laws and regulations for waste handling in each country. Contact your local waste management company for information.

10.3 Reconditioning

This product is suitable for reuse. To recondition the product for a new user, carry out the following actions:

- Inspection
- Cleaning and disinfection
- Adaptation to the new user

For detailed information, see *8 Maintenance, page 52* and the service manual for this product.

Make sure that the user manual is handed over with the product.

If any damage or malfunction is detected, do not reuse the product.

11 Technical Data

11.1 Dimensions and weight

All dimension an weight specifications refer to a wide range of the wheelchair in a standard configuration. Dimension and weight (based on ISO 7176–1/5/7) may alter according to different configurations.

! **IMPORTANT!**
- In some configurations, the overall dimensions of the wheelchair when it is ready for use exceeds the authorised limits and the access to emergency escape routes is not possible.
- In some configurations, the wheelchair exceeds the size recommended for travelling by train in the EU.

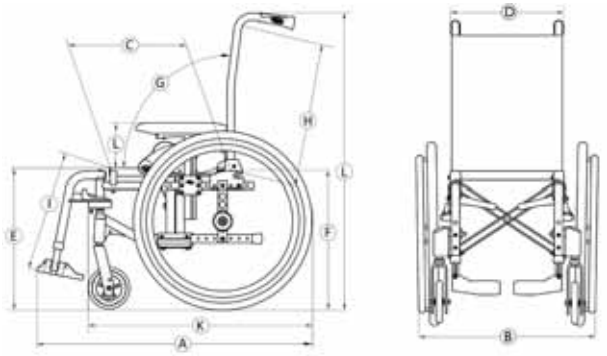

	Maximum user weight	80 kg
Ⓐ	Overall length with leg rests	690 – 1000 mm
Ⓑ	Overall width	365 – 585 mm
	Folded length	690 – 1000 mm
	Folded width	315 mm
	Folded height	870 – 1130 mm
	Total mass	from 13,5 – 15,5 kg
	Mass of the heaviest part	8 – 12 kg
	Static stability	Downhill: 0° – 7° Uphill: 0° – 16° Sideways: 0° – 15°
	Seat plane angle	1,5° – 8,5°
Ⓒ	Effective seat depth	200 – 375 mm
Ⓓ	Effective seat width	205 – 380 mm, in increments of 25 mm
Ⓔ	Seat surface height at front edge	410 – 460 mm, in increments of 25 mm
Ⓕ	Seat surface height at rear edge	335 – 440 mm, in increments of 25 mm
Ⓖ	Backrest angle	Range: 0° / +30° Fixed: 90° (+7°) Recliner: 90° (0°/+30°) mm, in increments of 10°

Ⓗ	Backrest height	350 – 450 mm
Ⓘ	Footrest to seat distance	125 – 450 mm, in increments of 10 mm
	Leg to seat surface angle	0° – 90°
Ⓙ	Armrest to seat height	N°1: 150 – 280 mm
	Front location of armrest structure	282mm
	Hand rim diameter	440 – 490 mm
	Horizontal location of axle	–75 / + 25 mm
	Minimum turning radius	395 mm
	Stowage width	240 mm
	Stowage height	500 – 620 mm
	Stowage length	from 815 – 990 mm
Ⓚ	Overall length without leg rests	460 – 820 mm
Ⓛ	Overall height	870 – 1130 mm
	Pivot width	1210 mm
	Maximum slope angle brake	7°

11.2 Maximum Weight of Removable Parts

Maximum weight of removable parts	
Part:	**Maximum weight:**
Leg rest angle adjustable with calf pad and footrest	1,77 kg
Armrest	0,59 kg
Rear wheel 550 mm (22”) solid with handrim and spoke guard	1,98 kg
Headrest / Neckrest	1,09 kg
Backrest cushion	1,00 kg
Seat cushion	0,7 kg
Table tray	1,91 kg

11.3 Tyres

The ideal pressure depends on the tyre type:

Tyre	Max. pressure		
Pneumatic profiled tyre: 560 mm (22”); 515 mm (20”)	4.5 bar	450 kPa	65 psi
Solid tyre : 560 mm (22”); 515 mm (20”); 305 mm (12”)	-	-	-
Solid tyre: 125 mm (5”)	-	-	-

The compatibility of the tyres listed above depends on the configuration and/or model of your wheelchair.

In case of a tyre puncture consult a suitable workshop (e.g. bike repair shop, bicycle dealer ...) to have the tube replaced by a skilled person.

The size of the tyre is mentioned on the sidewall of the tyre. The change of appropriate tyres must be carried out by a qualified technician.

CAUTION!

– The tyres pressure have to be equal in both wheels to avoid a less driving comfort, to keep the brakes efficiency and an easy propelling of the wheelchair.

11.4 Materials

Frame/backrest tubes	Aluminum, Steel
Upholstery (seat and backrest)	Foam PUR, Fabric Nylon and Polyester
Push handles	PVC
Plastic parts like brake handles, clothes guards, foot plates, armpads and parts of most options	Thermoplastic (e.g. PA, PP, ABS and PUR) according to marking on the parts
Folding mechanism / vertical brace / clamping parts / castor forks	Aluminum, Steel
Screws, washers and nuts	Steel

All materials used are protected against corrosion. We use only REACH compliant materials and components.

Theft and metal detection systems: in seldom cases the materials used in the wheelchair may activate theft and metal detection systems.

11.5 Environmental conditions

	Storage and transportation	Operation
Temperature	-20 °C to 40 °C	-5 °C to 40 °C
Relative humidity	20 % to 90 % at 30 °C, not condensing	
Atmospheric pressure	800 hPa to 1060 hPa	

Be aware that when a wheelchair has been stored under low temperatures, it must be adjusted to chapter *8 Maintenance, page 52* before use.

Notes

Invacare distributors

United Kingdom:
Invacare Limited
Pencoed Technology Park, Pencoed
Bridgend CF35 5AQ
Tel: (44) (0) 1656 776 222
Fax: (44) (0) 1656 776 220
uk@invacare.com
www.invacare.co.uk

Ireland:
Invacare Ireland Ltd,
Unit 5 Seatown Business Campus
Seatown Road, Swords, County Dublin
Tel : (353) 1 810 7084
Fax: (353) 1 810 7085
ireland@invacare.com
www.invacare.ie

Australia:
Invacare Australia Pty. Ltd.
1 Lenton Place, North Rocks NSW 2151
Australia
Phone: 1800 460 460
Fax: 1800 814 367
orders@invacare.com.au
www.invacare.com.au

New Zealand:
Invacare New Zealand Ltd
4 Westfield Place, Mt Wellington 1060
New Zealand
Phone: 0800 468 222
Fax: 0800 807 788
sales@invacare.co.nz
www.invacare.co.nz

Asia:
Invacare Asia Ltd.
1 Lenton Place, North Rocks NSW 2151
Australia
Phone: (61) (02) 8839 5333
Fax: (61) (02) 8839 5343
asiasales@invacare.com
www.invacare.com

Invacare France Operations SAS
Route de St Roch
F–37230 Fondettes
France

1608517-D 2020-09-22

Making Life's Experiences Possible®

Yes, you can.®