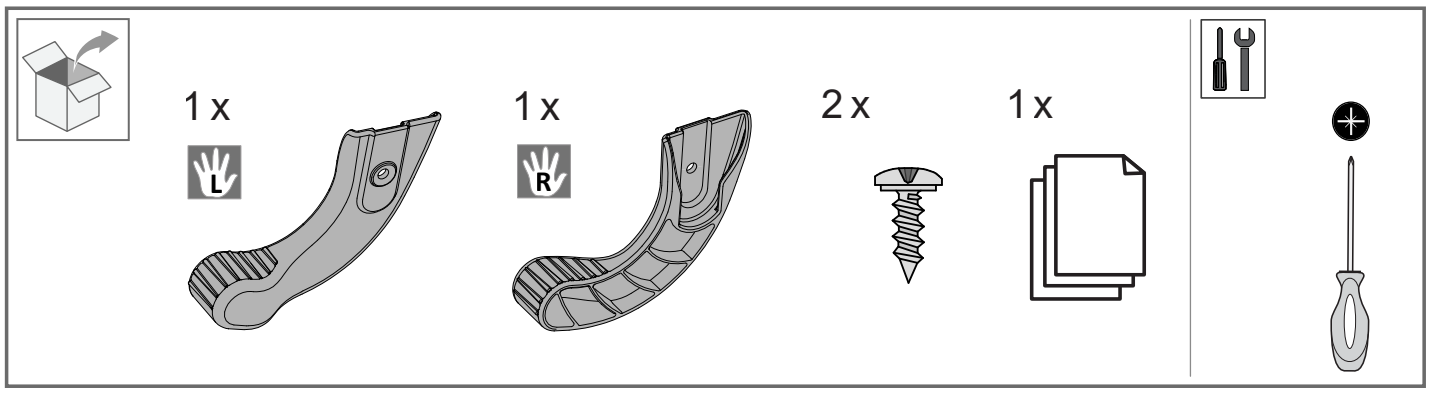

Curb Climber for Dolomite® **Gloss®**

1.

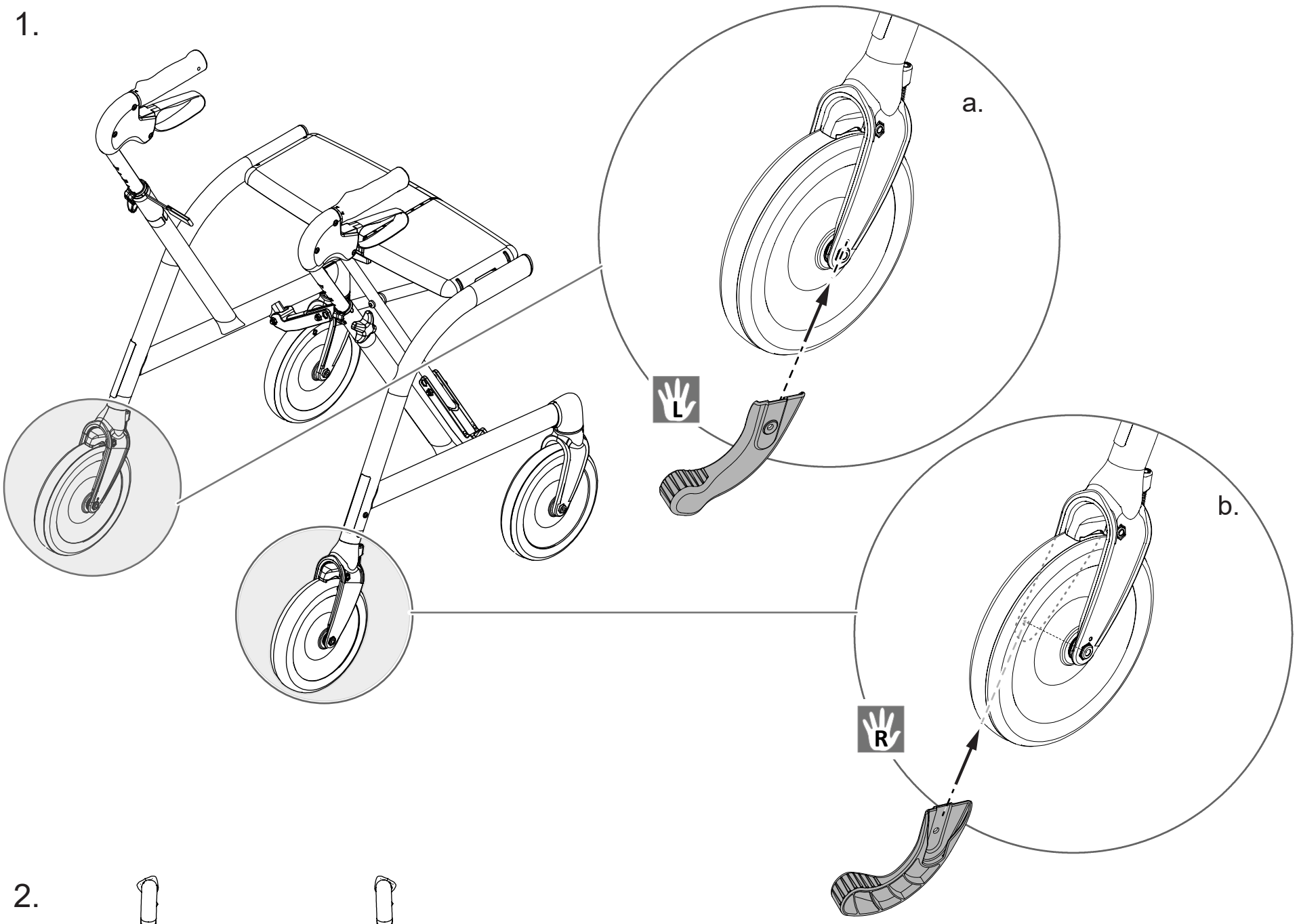

2.

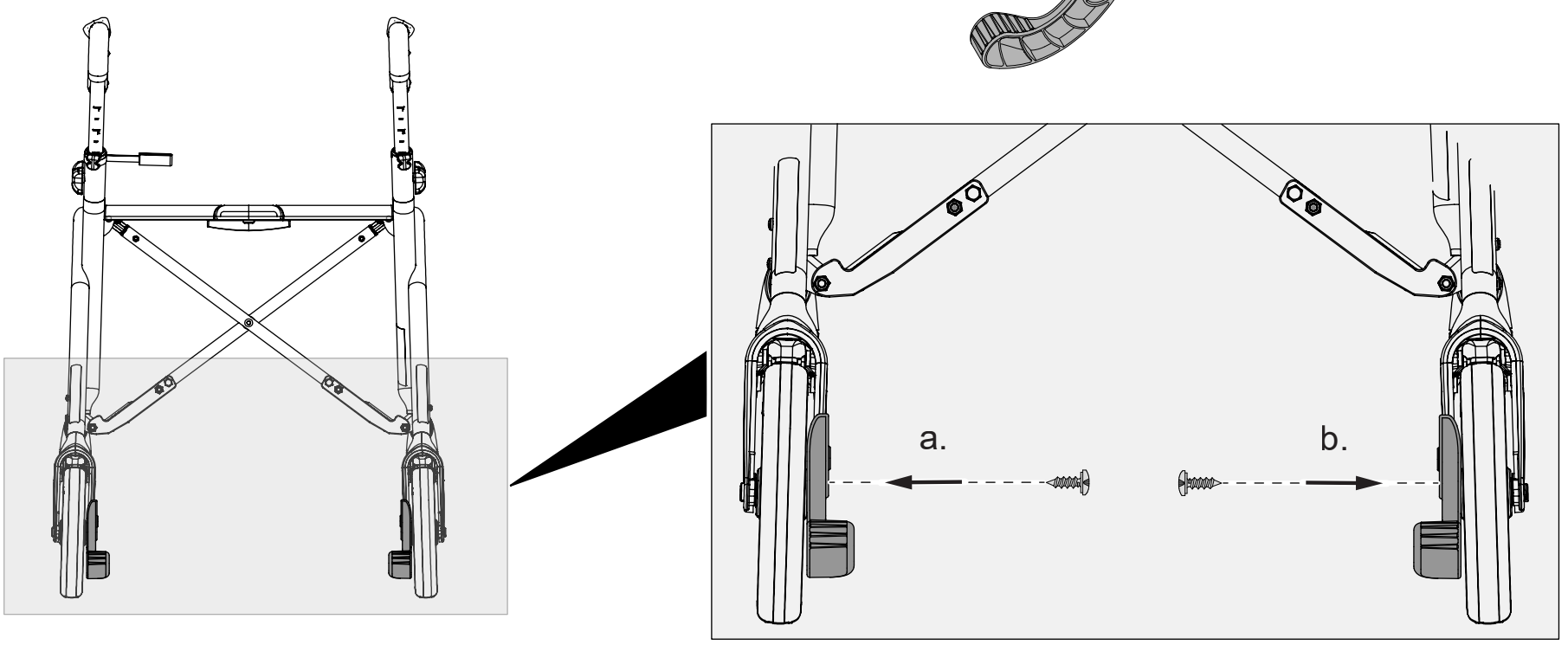

Invacare Rea AB
Växjövägen 303
SE-343 71 Diö
Sweden

Yes, you can.