Invacare® Storm®4 Series

Storm4, Storm4 X-plore

en Power Wheelchair Service Manual

PROVIDER: Keep this manual.
The procedures in this manual MUST be performed by a qualified technician.

Yes, you can.

© 2019 Invacare Corporation
All rights reserved. Republication, duplication or modification in whole or in part is prohibited without prior written permission from Invacare. Trademarks are identified by ™ and ®. All trademarks are owned by or licensed to Invacare Corporation or its subsidiaries unless otherwise noted.

Contents

1 General 4
1.1 About this manual. 4
1.2 General Information 4
1.3 Notes on Shipping. 4
1.4 Symbols in This Manual. 4
1.5 Images in This Manual 4

2 Safety 5
2.1 Safety and Fitting Instructions 5

3 Hygiene 7
3.1 Handling of Returned Used Products 7

4 Setup. 8
4.1 Adjusting Seating Position 8
4.2 Adjusting seat height. 8
4.2.1 Adjusting Seat Height With Seat Column Installed 8
4.2.2 Adjusting seat height on type A electrical lifter column with adapter 9
4.2.3 Adjusting Seat Height on Type B Powered Lifter Column with Adapter 10
4.3 Adjusting Lower Leg Length. 11
4.4 Adjusting Centre of Gravity of Seat 11
4.4.1 Telescopic Seat Frame 12
4.4.2 One-Piece Seat Plate 13
4.5 Adjusting seat tilt 13
4.5.1 Adjusting seat tilt on a seat with a manual tilt module (till Dec. 2010). 13
4.5.2 Adjusting Seat Tilt on a Seat With Manual Tilt Module 14

5 Testing 15
5.1 Testing Motor 15
5.2 Testing Motor Brake 15
5.3 Rain test 15
5.4 Field Load Test 16
5.5 Checking Actuator. 16
5.6 Checking Battery Charge Level. 17

6 Service. 18
6.1 General warning information on installation work 18
6.2 Tightening Torques 18
6.3 Overview Mobility Device 18
6.4 Troubleshooting 19
6.4.1 Operational Faults 19
6.4.2 Drive fault diagnosis. 19
6.4.3 Charging device fault diagnosis. 22
6.5 Service Plan (Once A Year) 23
6.6 Drive Components. 25
6.6.1 Replacing Motor-Gearbox Unit 25
6.6.2 Replacing Motor-Gearbox Coupling (SSD Motor) 26
6.6.3 Replacing or Rotating Motor-Gearbox Unit Sealing Ring (SSD Motor) 27
6.6.4 Replacing Motor-Gearbox Unit (Storm⁴ X-plore) 28
6.6.5 Replacing and Calibrating True Track Plus Motor 29
6.6.6 Replacing Carbon Brushes 35
6.6.7 Replacing Engaging Turn Knob 37
6.6.8 Replacing Motor Swing Arm 38
6.6.9 Replacing Suspension Strut. 39
6.6.10 Replacing Upper Suspension Strut (only Storm⁴ X-plore) 40
6.6.11 Replacing Rear Compression Spring (True Track Plus Motor) 41
6.6.12 Replacing Castor Fork. 42
6.6.13 Adjusting Castor Fork 43
6.6.14 Replacing Front Swing Arm. 43
6.6.15 Replacing Trim on Suspension Brackets (Storm⁴ X-plore) 44
6.6.16 Replacing Front Bracket of Upper Suspension (Storm⁴ X-plore) 44
6.6.17 Replacing Front Swing Arm (Storm⁴ X-plore) 45
6.6.18 Replacing Rear Bracket of Upper Suspension (Storm⁴ X-plore) 46
6.7 Wheels 46
6.7.1 Repair Instructions 46
6.7.2 Tyre Pressure 47
6.7.3 Tyre Types 47
6.7.4 Specific Tightening Torques 48
6.7.5 Overview of Power Wheelchair Models and Wheel Types 48
6.7.6 Replacing Tyres 50
6.7.7 Replacing Drive Wheel (5–Screw Installation) 52
6.7.8 Replacing Drive Wheel (with True Track Plus motor) 52
6.7.9 Replacing Castor Wheels on Single-Sided Fork. 53
6.7.10 Replacing Drive Wheel Hub 54
6.8 Shrouds 55
6.8.1 Replacing Rear Shroud 55
6.8.2 Replacing Centre Shroud 55
6.8.3 Replacing Front Shroud 55
6.8.4 Replacing module shroud 56
6.8.5 Replacing Rear Light Shroud 56
6.8.6 Replacing Front Fender 57
6.8.7 Replacing Fender 57
6.9 Controls 59
6.9.1 Replacing power module 59
6.9.2 Replacing LiNX power module bracket 60
6.9.3 Replacing True Trac Plus power module 60
6.9.4 Replacing G-Trac Ssensor 61
6.9.5 Replacing Gyro plate 62
6.9.6 Replacing actuator module under seat 62
6.9.7 Replacing Light Board. 63
6.9.8 Replacing Lighting/Actuator Module CLAM 63
6.9.9 Replacing solid angle sensor bracket. 64
6.9.10 Replacing USB charger 65
6.9.11 Replacing 4–way bus socket 65
6.9.12 Drive program selection after component replacement 66
6.9.13 Updating Software 66
6.9.14 Main Fuse 67
6.9.15 Cables 68
6.10 Batteries 74
6.10.1 General Instructions on Handling Batteries 75
6.10.2 Handling Damaged Batteries Correctly 75
6.10.3 Making Batteries Accessible 75
6.10.4 Removing Batteries 76
6.11 Lighting Unit 77
6.11.1 Replacing Front Bulb 77
6.11.2 Replacing Headlight (Conventional). 77
6.11.3 Replacing Headlight (Conventional on Modulite) 78
6.11.4 Replacing Headlight (LED). 79
6.11.5 Replacing Headlight (LED on Modulite) 79
6.11.6 Replacing Headlight Holder (Conventional) 80
6.11.7 Replacing Headlight Holder (Conventional on Modulite). 81
6.11.8 Replacing Headlight Holder (LED) 82
6.11.9 Replacing Headlight Holder (LED on Modulite) 83
6.11.10 Replacing Rear Bulb (Conventional). 84
6.11.11 Replacing Rear Light (Conventional) 85
6.11.12 Replacing Rear Light Holder (Conventional). 85
6.11.13 Replacing Complete Rear Light (LED). 86
6.12 Seating 87
6.12.1 Replacing Seat Support Plates. 87
6.12.2 Replacing Tilt Actuator 88
6.12.3 Replacing Tilt Spindle 88
6.12.4 Replacing Tilt Bracket 89
6.12.5 Replacing Seat Frame 90
6.12.6 Replacing Seat Support. 90
6.12.7 Replacing Planetary Gear 91
6.13 Seat column/lifter column 91
6.13.1 Column Types Overview 91
6.13.2 Replacing Seat Column 92
6.13.3 Replacing Lifter Column Type A 93
6.13.4 Replacing Lifter Column Type B 94
6.14 Backrest 95
6.14.1 Replacing EasyAdapt Back Unit 95
6.14.2 Replacing / Adjusting Universal Backrest Frame for EasyAdapt 95
6.15 Mounting Dahl Docking System 96

1 General

1.1 About this manual

- This manual refers to configurations with Modulite seat system. Older specifications have been described in revision 11 of this service manual.
- For seat systems, refer to the corresponding manual.
- For Shark, DX, DX2, refer to revision 11 of this service manual.
- For LiNX controls, refer to LiNX Service Manual.

1.2 General Information

Service and maintenance work must be carried out taking this document into account.

It is imperative that you observe safety information.

Information about operation or about general maintenance and care work on the product should be taken from service manual.

Assembly of accessories might not be described in this document. Refer to the manual delivered with the accessory. Additional manuals can be ordered from Invacare. See addresses at the end of this document.

You can find information about ordering spare parts in the spare parts catalogue.

Spare parts must match original Invacare parts. Only use spare parts which have been approved by Invacare.

The product may only be maintained and overhauled by qualified personnel.

The minimum requirement for service technicians is suitable training, such as in the cycle or orthopedic mechanics fields, or sufficiently long-term job experience. Experience in the use of electrical measuring equipment (multimeters) is also a requirement. Special Invacare training is recommended.

Alterations to the mobility device which occur as a result of incorrectly or improperly executed maintenance or overhaul work lead to the exclusion of all liability on the side of Invacare.

If you have any problems or questions contact your provider.

1.3 Notes on Shipping

- If the mobility device has to be shipped back to the manufacturer for major repairs, you should always use the original packaging for transport.
- Please attach a precise description of the fault.

1.4 Symbols in This Manual

In this manual, hazard statements are indicated by symbols. The symbols are accompanied by a signal word that indicates the severity of the risk.

WARNING
Indicates a hazardous situation that could result in serious injury or death if it is not avoided.

CAUTION
Indicates a hazardous situation that could result in minor or slight injury if it is not avoided.

IMPORTANT
Indicates a hazardous situation that could result in damage to property if it is not avoided.

Gives useful tips, recommendations and information for efficient, trouble-free use.

This product complies with Directive 93/42/EEC concerning medical devices. The launch date of this product is stated in the CE declaration of conformity.

This symbol identifies a list of various tools, components and items which you will need in order to carry out certain work.

1.5 Images in This Manual

The detailed images in this manual are given marks to identify various components. Component marks in text and operational instructions always relate to the image directly above.

2 Safety

2.1 Safety and Fitting Instructions

These safety instructions are intended to prevent accidents at work, and it is imperative that they are observed.

Before any inspection or repair work

- Read and observe this repair manual and the associated user manual.
- Observe the minimum requirements for carrying out the work (see *1.2 General Information, page 4*).

Personal Safety Equipment

Safety shoes

The mobility device, and some of its components, are very heavy. These parts can result in injuries to the feet if they are allowed to drop.

- Wear standardized safety shoes during all work.

Eye protection

It is possible that battery acid can be discharged when working on defective batteries or when handling batteries improperly.

- Always wear eye protection when working on any defective or possibly defective batteries.

Safety gloves

It is possible that battery acid can be discharged when working on defective batteries or when handling batteries improperly.

- Always wear acid-proof safety gloves when working on any defective or possibly defective batteries.

General Safety Information and Information About Fitting / Removal

DANGER!
Risk of Death, Serious Injury, or Damage
Lighted cigarettes dropped onto an upholstered seating system can cause a fire resulting in death, serious injury, or damage. Mobility device occupants are at particular risk of death or serious injury from these fires and resulting fumes because they may not have the ability to move away from the mobility device.
– DO NOT smoke while using this mobility device.

WARNING!
Risk of Serious Injury or Damage
Storing or using the mobility device near open flame or combustible products can result in serious injury or damage.
– Avoid storing or using the mobility device near open flame or combustible products.

CAUTION!
Risk of crushing
Various components such as the drive unit, batteries, seat etc are very heavy. This results in injury hazards to your hands.
– Note the high weight of some components. This applies especially to the removal of drive units, batteries and the seat.

CAUTION!
Injury hazard if the mobility device starts moving unintentionally during repair work
– Switch the power supply off (ON/OFF key).
– Engage the drive.
– Before lifting up, secure the mobility device by using chocks to block the wheels.

CAUTION!
Fire and burn hazard due to electrical short-circuit
– The mobility device must be completely switched off before removal of voltage-carrying components! To do this, remove the batteries.
– Avoid short-circuiting the contacts when carrying out measurements on voltage-carrying components.

CAUTION!
Risk of burns from hot surfaces on the motor
– Allow the motors to cool down before commencing work on them.

CAUTION!
Injury hazard and risk of damage to mobility device due to improper or incomplete maintenance work
– Use only undamaged tools in good condition.
– Some moving parts are mounted in sockets with PTFE coating (Teflon™). Never grease these sockets!
– Never use "normal" nuts instead of self-locking nuts.
– Always use correctly-dimensioned washers and spacers.
– When reassembling, always replace any cable ties which were cut during dismantling.
– After completing your work / before renewed start-up of the mobility device, check all connections for tight fitting.
– After completing your work / before renewed start-up of the mobility device, check all parts for correct locking.
– Only operate the mobility device with the approved tyre pressures (see technical data).
– Check all electrical components for correct function. Note that incorrect polarity can result in damage to the control system.
– Always carry out a trial run at the end of your work.

CAUTION!
Risk of injury and damage to property, if the maximum speed reduction on a wheelchair with a lifter does not function correctly
The wheelchair's control unit must reduce the maximum possible speed as soon as the lifter is raised.
– Test the maximum speed reduction for correct function after any maintenance work or modifications to the wheelchair.

CAUTION!
Any changes to the drive program can affect the driving characteristics and the tipping stability of the mobility device
– Changes to the drive program may only be carried out by trained Invacare providers.
– Invacare supplies all mobility devices with a standard drive program ex-works. Invacare can only give a warranty for safe mobility device driving behavior - especially tipping stability - for this standard drive program.

Mark all current settings for the mobility device (seat, armrests, backrest etc.), and the associated cable connecting plugs, before dismantling. This makes reassembly easier. All plugs are fitted with mechanical locks which prevent release of the connecting plugs during operation. To release the connecting plugs the safety locks must be pressed in. When reassembling ensure that these safety locks are correctly engaged.

3 Hygiene

3.1 Handling of Returned Used Products

When reconditioning or repairing returned mobility devices:

- Take precautions for yourself and the product.
- Use protection equipment as specified locally.

Before Transport (According to Biological Agents Ordinance)

Treat product according to following process steps:

Process Step	Component	Application	Conditioning technique	Work Station
Manual cleaning	Surface of used device	Before repair or reconditioning	Use saturated towel to apply cleaning detergent and remove residues after impact.	Cleaning and disinfection
Disinfection	Surface of used device	Before repair or reconditioning	Use saturated disinfectant wipes and clean* the device surface.	Cleaning and disinfection

*Invacare uses detergent "Nücosept special" 1.5% in water ml/ml

Disinfection Tools

- Disposable wipes (fleece)
- Brushes to clean areas difficult to access

Further Information

For more information contact your Invacare service department.

4 Setup

4.1 Adjusting Seating Position

In order to adapt mobility device optimally to requirements of user, we recommend that you ask your authorised Invacare provider to adjust seat depth individually. Adapting seat to user's seating position depends on which seat has been fitted, and should be carried out in the following sequence.

1. Adjusting seat height. See *4.2 Adjusting seat height, page 8* .
2. Adjusting lower leg length. See *4.3 Adjusting Lower Leg Length, page 11*.
3. Adjusting the seat width and seat depth. See Modulite service manual and Storm4 user manual.
4. Adjusting center of gravity of seat. See *4.4 Adjusting Centre of Gravity of Seat, page 11*.
5. Adjusting seat tilt. See *4.5.1 Adjusting seat tilt on a seat with a manual tilt module (till Dec. 2010), page 13* and *4.5.2 Adjusting Seat Tilt on a Seat With Manual Tilt Module, page 14*.
6. Checking that swivel castors can move freely.
7. Repetition of steps 2 to 6, if necessary.

CAUTION!
Risk of injury after tilting of mobility device caused by blocked castors
– Always check seat depth settings for both forward and reverse movement. Make sure castors can rotate freely and have not contact to any fixed mobility device component.

CAUTION!
Risk of tipping over
Any change in seating position can negatively influence stability of mobility device.
– Always make sure the wheelchair is stable and will not tip over, after adjusting seating position.

CAUTION!
Any changes to drive program can affect driving characteristics and tipping stability of mobility device
– Changes to drive program may only be carried out by trained Invacare specialist provider.
– Invacare supplies all mobility devices with a standard drive program ex-works. Invacare can only give a warranty for safe mobility device driving behavior - especially tipping stability - for this standard drive program.

CAUTION!
Risk of crushing
The seat is very heavy. Risk of injury to hands and feet.
– Pay attention to hand and feet.
– Use proper lifting techniques.

4.2 Adjusting seat height

The seat height is adjusted via seat column.

For an overview of different types of seat columns, see “Seat column / lifter column”.

4.2.1 Adjusting Seat Height With Seat Column Installed

CAUTION!
Risk of crushing
The seat is very heavy. Risk of injury to hands and feet.
– Use proper lifting techniques.

CAUTION!
Risk of crushing
Risk of injury caused by uncontrolled movement of mobility device.
– Switch off power supply (ON/OFF key).
– Engage drive.

- 4 mm Allen key
- TX40 Torx key
- Oblique pliers
- Cable ties

Manual Seat Height Adjustment

1. Remove seat. See *6.12.6 Replacing Seat Support, page 90*.
2. Loosen and remove four screws (2) on the upper side of column (3).
3. Lift off shroud plate (1).

   The shroud plate has four flaps pointing downward. There are two tapped holes on each flap for screws (2). By selecting upper or lower holes, seat can be adjusted to two different heights.

4. Attach shroud plate (1).
5. Install screws (2) in such a way that shroud plate is flush fitted or is somewhat elevated depending on desired seat height.
6. Install parts in reverse order.
7. Check all mobility device functions.

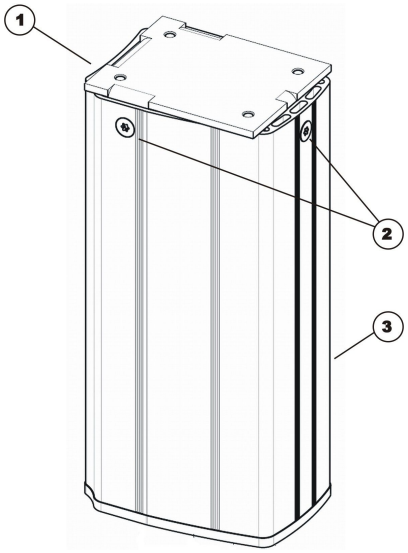

Fig. 4-1

4.2.2 Adjusting seat height on type A electrical lifter column with adapter

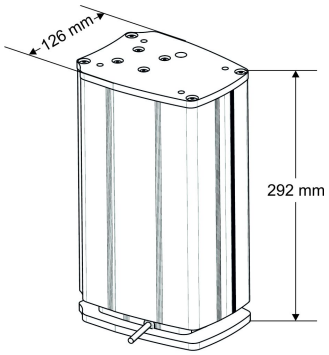

CAUTION!
Risk of crushing
The seat is very heavy. Risk of injury to hands and feet.
– Use proper lifting techniques.

CAUTION!
Risk of crushing
Risk of injury caused by uncontrolled movement of mobility device.
– Switch off power supply (ON/OFF key).
– Engage drive.

- 4 mm Allen key
- 5 mm Allen key
- TX 40 torx wrench
- Oblique pliers
- Cable ties
- Torque wrench 5 – 30 Nm (or similar)
- Medium-strength thread-locking fluid, e.g. Loctite 243

Adjusting seat height manually with an adapter

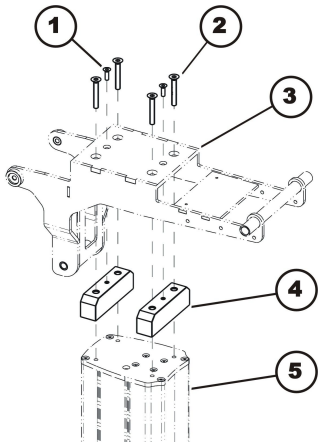

1. Remove seat. See *4.5.1 Adjusting seat tilt on a seat with a manual tilt module (till Dec. 2010), page 13* or "Replacing seat support with electric tilt module").
2. Place adapter (4) in seat support (3) from below.
3. Fix adapter with two screws (1).
4. Replace seat support on lifter pillar (5).

CAUTION!
Risk of damage to lifter pillar
Lifter pillar can be damaged if screws are too long. The screws used may protrude by a maximum of 8.5 mm from the adapters.
– Only use screws supplied.
– Check screw length precisely if you do use other screws.

5. Apply medium-strength screw blocker system to four screws (2).
6. Insert four screws (2) and tighten them to a torque of 25 Nm.
7. Install parts in reverse order.
8. Test all functions.

4.2.3 Adjusting Seat Height on Type B Powered Lifter Column with Adapter

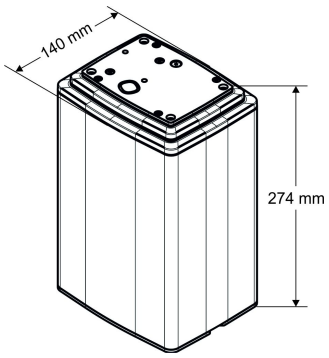

Fig. 4-2

CAUTION!
Risk of crushing
The seat is very heavy. Risk of injury to hands and feet.
– Use proper lifting techniques.

CAUTION!
Risk of crushing
Risk of injury caused by uncontrolled movement of mobility device.
– Turn off power supply (ON/OFF key).
– Engage drive.

- 4 mm Allen key
- 5 mm Allen key
- TX40 torx wrench
- Oblique pliers
- Tie wraps
- Torque wrench 5 – 30 Nm (or similar)
- Medium-strength thread-locking fluid, e.g. Loctite 243

Adjusting Seat Height Manually with Adapter

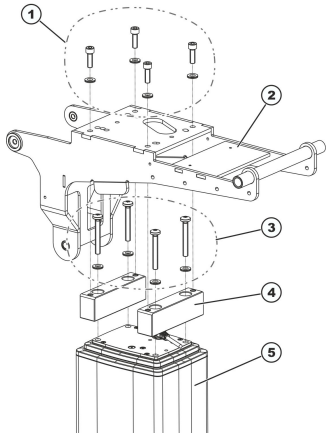

Fig. 4-3

1. Remove seat. See “Replacing seat support with manual tilt module (till Dec. 2010)” or “Replacing seat support with electric tilt module”.

CAUTION!
Risk of damage to lifter column
Using incorrect screws or inserting and tightening screws incorrectly will damage lifter column. The lifter column is supplied with self-tapping screws. The screws are used on underside as well as on upper side.
– Use only screws provided.
– If screws were already screwed in: When reinstalling screws, make sure that they are screwed carefully into existing thread.
– Tighten screws to a torque of 15-17 Nm.

2. Position adapter (4) on top of lifter column (5).
3. Secure adapter with self-tapping screws and washers (3).
4. Position seat frame (2) on lifter column and adapter.
5. Apply medium strength thread locking adhesive to four screws (1).
6. Insert four screws and tighten them to torque of 25 Nm.
7. Install parts in reverse order.
8. Install cables. See “Installing on lifter column type B”.
9. Check all mobility device functions.

4.3 Adjusting Lower Leg Length

Invacare offers a range of legrests which can be adjusted individually. See user manual.

4.4 Adjusting Centre of Gravity of Seat

The centre of gravity of the seat can be adjusted by mounting the seat frame farther towards the front or the rear of the seat.

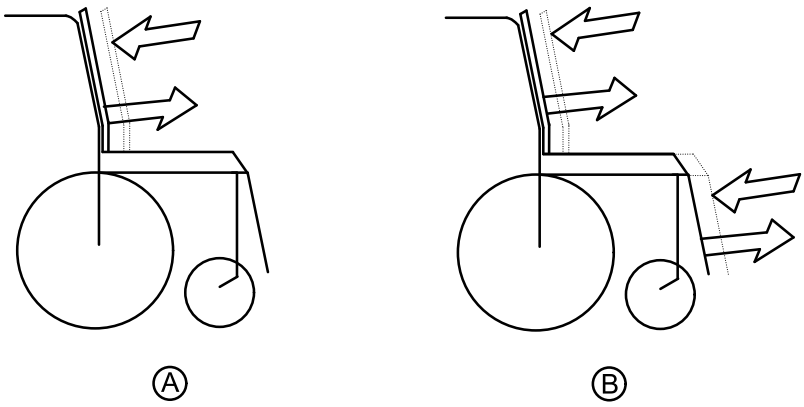

Fig. 4-4

A: Seat depth

B: Centre of gravity of the seat

The user weight and seat depth have strong influences on the choice of the centre of gravity (CoG). If the user is heavy and the seat depth is greater, the focus should be the farther back. For best possible driving characteristics of rear-wheel drive wheelchairs, the weight should be distributed: 30 – 40 % front and 60 - 70 % rear. For centre wheel drives, the weight should be distributed 25 % front, 50 % centre and 25 % rear.

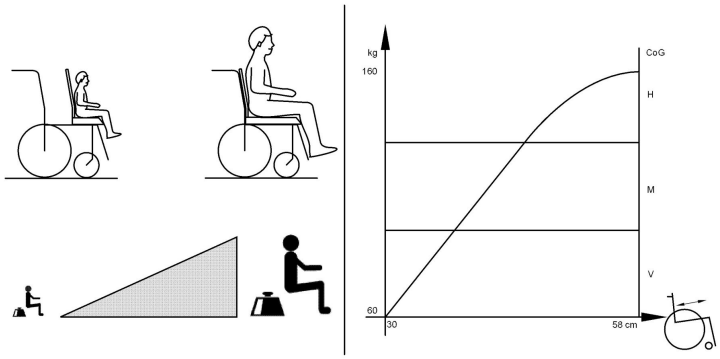

Fig. 4-5

CAUTION!
Risk of damage due to collisions of the legrests with other parts of the mobility device.
– Set the legrests to the smallest angle before adjusting the seat centre of gravity.
– Pay attention with adjusting the seat centre of gravity that the legrests do not touch any other parts of the wheelchair. This ensures that the legrests can not collide with other parts of the wheelchair.

Seat Systems

For details on

- Easy Adapt seat
- Optimist seat
- Recaro seat

refer to revision 12 of this service manual.

Modulite Seat

The Modulite seat is available in two versions:

- Adjustment of the center of gravity via the lateral profiles telescopic seat frame (plate and strap), as described in *4.4.1 Telescopic Seat Frame, page 12*.
- Adjustment of the center of gravity via the oblong holes of the seat adapter one piece seat plate, as described in *4.4.2 One-Piece Seat Plate, page 13*.

4.4.1 Telescopic Seat Frame

- 6 mm Allen key

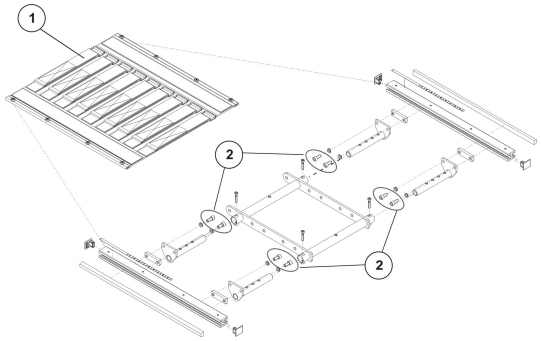

Fig. 4-6

1. Remove seat plate or sling seat (1). See Modulite service manual, “Adjusting seat width/backrest width” chapter.
2. Loosen screws (2) in front and rear, left and right – DO NOT remove.
3. Shift position of seat.
4. Re-tighten screws.
5. Install seat plate or sling seat.

4.4.2 One-Piece Seat Plate

- 6 mm Allen key

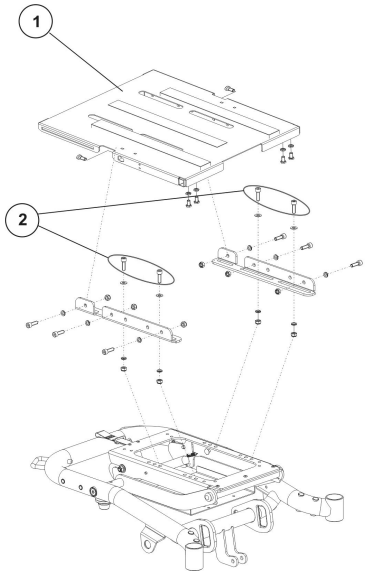

Fig. 4-7 This picture is an example.

1. Remove seat plate.
2. Loosen screws (2) left and right – DO NOT remove.
3. Shift position of seat frame.
4. Tighten screws.
5. Install seat plate.

4.5 Adjusting seat tilt

4.5.1 Adjusting seat tilt on a seat with a manual tilt module (till Dec. 2010)

WARNING!
Danger of crushing
The seat/seat support is very heavy. Injury hazard to hands and feet.
– Use proper lifting techniques.

Tools:
- 6 mm Allen key

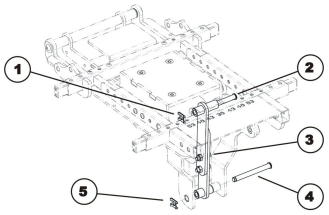

1. Please take into account that the seat is very heavy. Be sure not to crush your fingers or other parts of the body. Use proper lifting techniques.
2. Loosen and remove two Allen screws (3) with a 6 mm Allen key.
3. Tilt seat to the desired gradient.
4. Place two parts of strut on top of each other.
5. Refit Allen screws and tighten them.
6. Check all mobility device functions.

4.5.2 Adjusting Seat Tilt on a Seat With Manual Tilt Module

CAUTION!
Risk of crushing
Seat and frame are very heavy and can fall down without warning if seat tilt adjustment assembly is screwed apart too far. Risk of injury to hands and feet.
– Only change adjustments when nobody is seated in chair.
– Only change tilt adjustment to where distance between axles is a maximum of 300 mm.

- 19 mm wrench
- Measuring tape

1. Apply wrench to bolt (1) of tilt adjustment.
2. Turn tilt adjustment till desired angle is attained or distance between bolts is a maximum of 300 mm.

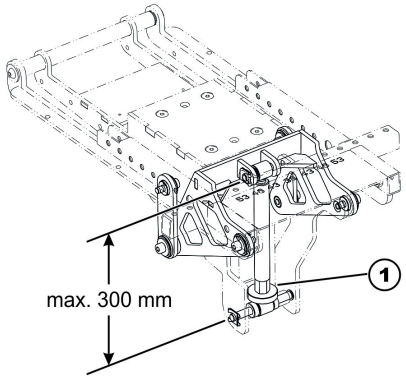

Fig. 4-8

5 Testing

5.1 Testing Motor

The testing procedure does not apply to True Track® Plus motors. In the case of the True Track® Plus motor, the cable plug is connected directly to the motor.

- Digital multimeter with resistance measurement

1. Remove rear shroud as described in *6.8.1 Replacing Rear Shroud, page 55*.
2. Pull the motor plug out of power module.
3. Connect the digital multimeter to the motor plug contacts (3) and measure the resistance between the contacts.

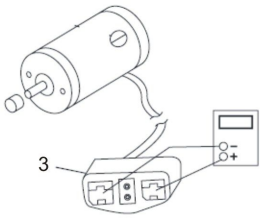

Fig. 5-1

A resistance of between 0.5 ohms and 5.0 ohms indicates a motor ready for operation. A resistance of between 15.0 ohms and infinity indicates a defective motor. High resistances are normally caused by bad connections or worn carbon brushes.

5.2 Testing Motor Brake

This test should only be carried out on mobility devices with conventional motor/gearbox units.

CAUTION!
Risk of damage to power module due to shorts in motor brake
– Never connect a shorted motor brake to an intact power module.
– Always replace shorted brakes immediately.

A defective motor can damage the power module, but a defective power module cannot damage the motor.

- Phillips screwdriver, size 2
- Digital multimeter with resistance measurement

1. Remove rear shroud as described in *6.8.1 Replacing Rear Shroud, page 55*.
2. Pull motor plug out of the power module.
3. Connect the digital multimeter to the adjacent central motor plug contacts (3) and measure the resistance between the contacts.
4. If there is a defect, replace the motor and send it to Invacare Service for inspection or repair.

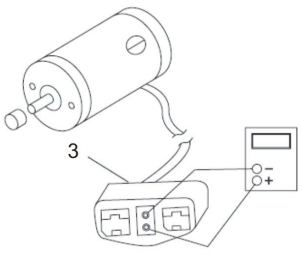

Fig. 5-2

A resistance of between 40 ohms and 80 ohms indicates an intact brake. A resistance of 0 ohms or a very high resistance (mega-ohms or infinity) indicates a short-circuit, a bad connection or a defective brake.

5.3 Rain test

- Check to ensure that the black battery terminal caps are secured in place, gaiter is not torn or cracked where water can enter and that all electrical connections are secure at all times.
- Do not use the mobility device if the gaiter is torn or cracked. If the gaiter becomes torn or cracked, replace immediately.

5.4 Field Load Test

Old batteries loose their ability to store and release power due to increased internal resistance. In this procedure, batteries are tested under load using a digital voltmeter to check battery charge level at the charger connector. The charger connector is located on the remote. When voltage at the output drops 1.0 volts under load (2.0 volts for a pair), replace the batteries.

Read these instructions carefully and the manufacturer's instructions on the digital voltmeter before proceeding.

- Voltmeter

WARNING!
– When performing the following steps, ensure your feet are clear from casters and wall, otherwise injury may result.

1. Switch electronics OFF on remote.
2. Make sure battery is fully charged. An extremely discharged battery will exhibit the same symptoms as a bad battery.
3. Remove footboard/legrests from mobility device.
4. Connect voltmeter leads to charger connector Ⓐ on mobility device. Most digital voltmeters Ⓑ are not affected by polarity. However, analog meters (meters with swinging needles) can be and should be used carefully.

   A good meter reading should be 25.5 VDC to 26.0 VDC with the chair in neutral.

5. Switch electronics ON on remote.
6. Ensue that your feet are clear from casters and wall.
7. Run mobility device in neutral for at least 2 minutes.
8. Sit in mobility device and place your feet against a door jam, workbench or other stationary object.
9. Carefully give forward command, trying to drive the mobility device through the stationary object. The load should draw between 30 amps to 40 amps from the batteries for 0.3 seconds.

   Performing this step puts a heavy load on the batteries as they try to push through the stationary object. If the wheels spin, have two individuals (one on each arm) apply as much downward pressure as possible on the arms of the mobility device.

10. Read meter while motors are straining to determine voltage under load.

    If the voltage drops more than 2.0 volts from a pair of fully charged batteries during the 0.3 seconds, they should be replaced regardless of the unloaded voltages.

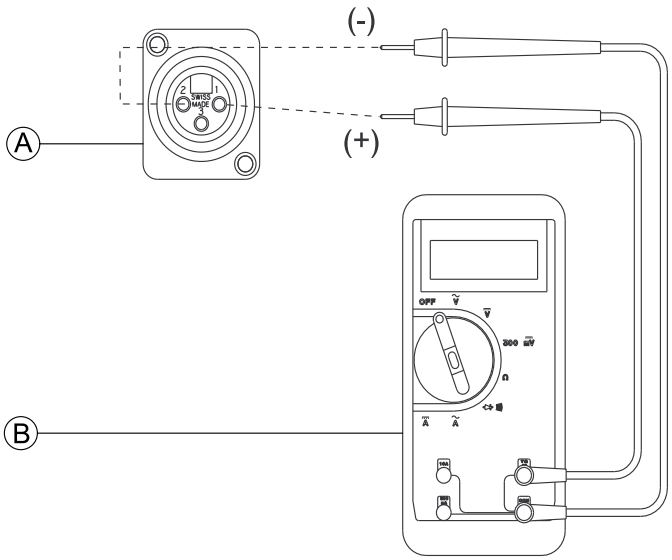

Fig. 5-3

5.5 Checking Actuator

- Digital multimeter with resistance measurement

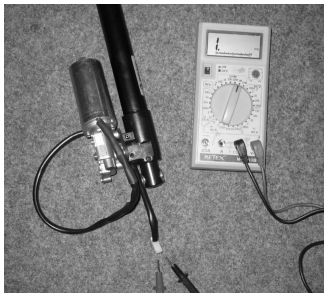

1. Turn OFF controls on remote.
2. If necessary, remove shroud.
3. Take note of the positions of all cables and sockets that they are connected to. Mark connectors and sockets or take a photograph with a digital camera.
4. Unplug actuator.
5. Connect multimeter to the contacts and measure the resistance between the contacts. The plug can have a different shape than shown in illustration.

   A resistance below 1 ohms indicates a short-circuit. Very high resistances indicates (mega-ohms or infinity) indicates a defective actuator. Actuator must be replaced in both cases.

5.6 Checking Battery Charge Level

The following “Dos” and “Don’ts” are provided for your convenience and safety.

DON’T	DO
Don’t perform any installation or maintenance without first reading this manual.	Read and understand this manual and any service information that accompanies a battery and charger before operating the personal transporter.
Don’t perform installation or maintenance of batteries in an area that could be damaged by battery spills.	Move the personal transporter to a work area before cleaning terminals, or opening battery box.
Don’t make it a habit to discharge batteries to the lowest level.	Recharge as frequently as possible to maintain a high charge level and extend battery life.
Don’t use chargers or batteries that are not appropriate for the chair.	Follow recommendations in this manual when selecting a battery or charger.
Don’t put new batteries into service before charging.	Fully charge a new battery before using.
Don’t tip or tilt batteries.	Use a carrying strap to remove, move or install a battery.
Don’t tap on clamps and terminals with tools.	Push battery clamps on the terminals. Spread clamps wider if necessary.

6 Service

6.1 General warning information on installation work

CAUTION!
Risk of injury and damage to property, if the maximum speed reduction on a mobility device with a lifter does not function correctly
The mobility device's control unit must reduce the maximum possible speed as soon as the lifter is raised.
– Test the maximum speed reduction for correct function after any maintenance work or modifications to the mobility device.

6.2 Tightening Torques

CAUTION!
Risk of damage to mobility device due to improperly tightened screws, nuts or plastic connections.
– Always tighten screws, nuts etc. to the stated tightening torque.
– Only tighten screws or nuts which are not listed here fingertight.

The tightening torques stated in the following list are based on the thread diameter for the nuts and bolts for which no specific values have been determined. All values assume dry and de-greased threads.

Thread	Tightening Torque in Nm ±10 %
M4	3 Nm
M5	6 Nm
M6	10 Nm
M8	25 Nm
M10	49 Nm
M12	80 Nm
M14	120 Nm
M16	180 Nm

6.3 Overview Mobility Device

With SSD Motor

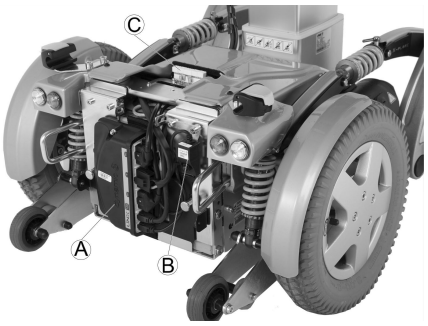

Fig. 6-1 Only LiNX electronics shown in the picture. DX2 electronics mounted the same way.

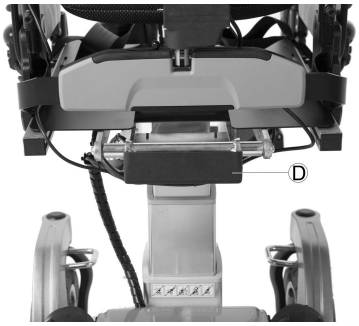

Fig. 6-2 Only LiNX electronics shown in the picture. DX2 electronics mounted the same way.

Ⓐ	Power module	It is located at the rear of the battery box.
Ⓑ	G-Trac sensor	It is located in the rear on the right, next to the battery box.
Ⓒ	Light board (optional)	It is only available if the mobility device is fitted with lighting.
Ⓓ	Actuator module (optional)	It controls powered legrests and powered recline.

With True Track Plus Motor

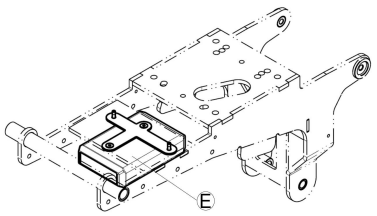

Fig. 6-3

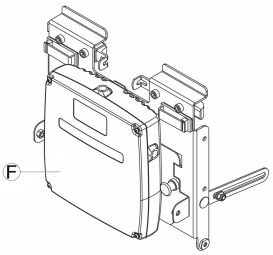

Fig. 6-4

Ⓔ	CLAM module (optional)	It controls powered adjustment options. The CLAM module is mounted under the seat frame.
Ⓕ	True Track Plus power module (optional)	It is at the rear of the battery box.

6.4 Troubleshooting

6.4.1 Operational Faults

Proceed as follows if you have any problems:

1. First assess the possible cause of the problem using the following table.
2. Check the remote status display. Evaluate the flash error code.
3. Carry out the necessary checks and repairs as recommended in the following table.

The various power modules can be fitted in connection with different remotes in the mobility device. Rectification of operational faults depends on the power module fitted. The power modules used are described in the corresponding controls manual.

The tables for rectification of operational faults listed in the following chapters are only an excerpt from the original manufacturer's manuals. You can obtain the original manuals from Invacare.

6.4.2 Drive fault diagnosis

Problem	Other symptoms	Possible cause	Solution	Documentation
Mobility device will not start	The remote status display illuminates normally and shows an error code.	Drive motors disengaged	Engage drive motors	See corresponding remote manual
	Remote status display does not illuminate	Batteries defective	Replace batteries	See *6.10.4 Removing Batteries, page 76*
		Completely discharged battery	Pre-charge batteries	See user manual
		Power supply to remote interrupted	Check main fuse	See *6.9.14 Main Fuse, page 67*
			Check cables between modules for loose connections or damage	See *6.9.15 Cables, page 68*
		Remote defective	Replace remote	See corresponding remote manual
	Remote status display flashing	Various causes	Assess error code	See corresponding remote manual

Problem	Other symptoms	Possible cause	Solution	Documentation
Mobility device judders in drive mode	None	Batteries defective (unstable voltage)	Replace batteries	See *6.10.4 Removing Batteries, page 76*
		Drive motor(s) defective	Replace motor(s)	See*6.6.1 Replacing Motor-Gearbox Unit, page 25* and *6.6.4 Replacing Motor-Gearbox Unit (Storm4 X-plore), page 28*
			Replace carbon brushes	See *6.6.3 Replacing or Rotating Motor-Gearbox Unit Sealing Ring (SSD Motor), page 27*
Mobility device pulls to left or right	None	Drive motors running asymmetrically	Change programming to synchronise motors	See *6.9.13 Updating Software, page 66*
	Tyre visibly dented	Not enough air in tyre	Check air pressure, replace inner tube and/or valve if necessary.	See *6.9.12 Drive program selection after component replacement, page 66*
Error message does not clear	None	Bad connections	Check all connecting cables.	See *6.9.15 Cables, page 68*
		Motor brake defective	Measure internal resistance of brakes, replace motor if defective.	
Motors stop and start again	None	Voltage decline	Stop driving and allow controls to cool down.	
Motor runs but loses power	None	High motor load allows power module to lower voltage	Stop driving and allow controls to cool down.	
Motors stop and do not start again	None	High motor load allows power module to lower voltage	Leave mobility device switched on and let power module operate. Charge batteries overnight with mobility device switched on.	
	None	Fuse burnt out	Check cabling and replace fuse	See *6.9.15 Cables, page 68* and *6.9.14 Main Fuse, page 67*
	None	Motor defective	Check carbon brushes and replace if necessary	See *6.6.3 Replacing or Rotating Motor-Gearbox Unit Sealing Ring (SSD Motor), page 27*
			Measure internal resistance of motor, replace motor if defective.	
	None	Power module defective	Replace power module	See *6.9.2 Replacing LiNX power module bracket, page 60* or *6.9.3 Replacing True Trac Plus power module, page 60*

Problem	Other symptoms	Possible cause	Solution	Documentation
Motors lose power while driving	None	Bad connections	Switch mobility device off, wait 10 seconds, switch mobility device on again. Check all cabling.	See *6.9.15 Cables, page 68*
Motor judders or runs irregularly, or only one motor runs	None	Carbon brushes worn	Check carbon brushes and replace if necessary	See
		Bearing defective	Replacing motor	See *6.6.1 Replacing Motor-Gearbox Unit, page 25* and *6.6.4 Replacing Motor-Gearbox Unit (Storm⁴ X-plore), page 28*
		Collector defective	Measure internal resistance of motor, replace motor if defective	See *6.6.1 Replacing Motor-Gearbox Unit, page 25* and *6.6.4 Replacing Motor-Gearbox Unit (Storm⁴ X-plore), page 28*
Motors do not run	None	Bad connections	Check all cabling	See *6.9.15 Cables, page 68*
		Fuse burnt out	Check cabling and replace fuse	See *6.9.15 Cables, page 68* and *6.9.14 Main Fuse, page 67*
		Batteries defective	Replace batteries	See *6.10.4 Removing Batteries, page 76*
		Cabling to power module or remote defective	Check cabling	See *6.9.15 Cables, page 68*
		Power module defective	Replace power module	See *6.9.2 Replacing LiNX power module bracket, page 60* or *6.9.3 Replacing True Trac Plus power module, page 60*
	Corroded contacts	Water, salt or urine has penetrated	Check cabling, replace if necessary	See *6.9.15 Cables, page 68*
Motor makes clicking noise	None	Bearing defective	Replacing motor	See*6.6.1 Replacing Motor-Gearbox Unit, page 25*
		Collector defective	Measure internal resistance of motor, replace motor if defective	See *6.6.1 Replacing Motor-Gearbox Unit, page 25* and *6.6.4 Replacing Motor-Gearbox Unit (Storm⁴ X-plore), page 28*.
Scraping noise or motor blocked	None	Bearing defective	Replacing motor	See *6.6.1 Replacing Motor-Gearbox Unit, page 25*
		Gearbox defective	Replace gearbox	See *6.6.4 Replacing Motor-Gearbox Unit (Storm⁴ X-plore), page 28* and

Problem	Other symptoms	Possible cause	Solution	Documentation
Gearbox makes clicking noise	None	Gearbox defective	Replace gearbox	See *6.6.1 Replacing Motor-Gearbox Unit, page 25* and *6.6.4 Replacing Motor-Gearbox Unit (Storm4 X-plore), page 28*
		Drive wheel loose	Tighten drive wheel, secure bolts with thread locking adhesive, if necessary	See *6.7.7 Replacing Drive Wheel (5–Screw Installation), page 52*
Gearbox losing oil	None	Sealing ring on drive shaft defective	Replace gearbox if sealing ring defective	See *6.6.4 Replacing Motor-Gearbox Unit (Storm4 X-plore), page 286.6.4 Replacing Motor-Gearbox Unit (Storm4 X-plore), page 28*
			Check carbon brushes for oil wetting, replace motor if brushes wet	See *6.6.3 Replacing or Rotating Motor-Gearbox Unit Sealing Ring (SSD Motor), page 27*
Irregular running	None	Drive shaft movable or bent	Check drive shaft, replace gearbox if defective	See *6.6.4 Replacing Motor-Gearbox Unit (Storm4 X-plore), page 28* and *6.6.1 Replacing Motor-Gearbox Unit, page 25*
Parts lost	None	Parts lost	Re-attach parts once found	
Batteries not being charged	None	Fuse burnt out, cable defective	Check cabling and replace fuse	See *6.9.15 Cables, page 68* and *6.9.14 Main Fuse, page 67*
		Batteries defective	Replace batteries	See *6.10.4 Removing Batteries, page 76*
	LEDs blinking on charging unit	Charging unit defective	Replace charging unit	See charging unit, user manual
Short charging period	None	One of the batteries could be defective	Replace batteries	See *6.10.4 Removing Batteries, page 76*
Mobility device runs too slowly	None	Remote defective	Replace remote	See corresponding remote manual
		Batteries defective	Replace batteries	See *6.10.4 Removing Batteries, page 76*

6.4.3 Charging device fault diagnosis

Symptom	Possible cause	Solution
No LEDs illuminating on battery charger	Charging device not connected to mains supply.	Ensure that the battery charger has been plugged in.
	No mains supply	Check the mains supply with a voltmeter.
	Defective mains supply cable.	Check the mains supply cable. Replace damaged cables or send the battery charger to Invacare Service for repair.
	LEDs are burnt out	Send the battery charger to Invacare Service for repair.

Symptom	Possible cause	Solution
	An internal fuse might be burnt out.	Send the battery charger to Invacare Service for repair.
Batteries do not charge	Fuse on mobility device has burnt out.	Check mobility device fuses. See “Main fuse”.
	Battery charger not connected to mobility device.	Ensure that the battery charger has been connected to the mobility device.
	No mains supply	Check the mains supply with a voltmeter.
	Defective mains supply cable.	Check the mains supply cable. Replace damaged cables or send the battery charger to Invacare Service for repair.
	Battery charger could be defective.	Use a battery charger which you know is working properly to charge the batteries. Send the defective battery charger to Invacare Service for repair.
	Battery voltage is too low to operate mobility device.	Replace the batteries. See “Removing batteries”

6.5 Service Plan (Once A Year)

CAUTION!
Danger of injury and damage to property, if the maximum speed reduction on a wheelchair with a lifter does not function correctly!
The wheelchair’s control unit must reduce the maximum possible speed as soon as the lifter is raised.
– Test the maximum speed reduction for correct function after any maintenance work or modifications to the wheelchair.

Component	Check	Remedy	Notes	✓
Posture belt	Damage to postural belt	Replace belt if damaged	See Modulite service manual	
	Belt lock function	Replace belt if damaged	See Modulite service manual	
Armrests	Damage to armrests	Replace shroud if damaged		
	Armrest fixings	Tighten screws		
clothes-guard	Damage to clothes-guard	Replace clothes-guard if damaged		
	clothes-guard fixings	Tighten screws		
Seat lock	Seat lock defective	Replace seat lock		
Seat tilt	Tight fit of the pin retainers	Replace pin retainers if necessary		
Lifter (manual or electric)	Check screws	Tighten screws		
Powered recline (if fitted)	Damage to backrest	Replace parts if damaged		
	Seams			
	Fixing	Tighten screws		
	Check cable	Replace motor cable if necessary		
	Check function			
Frames (chassis) / battery mounting	Check fixings, welded seams and battery mounting	Tighten screws		
		Replace components if necessary		
DAHL docking station	Check screws	Tighten screws		

Component	Check	Remedy	Notes	✓
Wheel suspension and wheels	Check drive wheels for tight fit and side play	Adjust, replace wheel hubs	See *6.7.7 Replacing Drive Wheel (5–Screw Installation), page 52* and *6.7.10 Replacing Drive Wheel Hub, page 54*	
	Check castors for tight fit, float and side play	Replace wheels, wheel fork or wheel bearings	See *6.6.12 Replacing Castor Fork, page 42*	
	Tyres	Repair or replace if damaged	See *6.7.3 Tyre Types, page 47*	
	Check suspension	Repair or replace if damaged	See *6.6.9 Replacing Suspension Strut, page 39*	
	Check straight running	Replace wheels, wheel fork or wheel bearings	See *6.6.12 Replacing Castor Fork, page 42*	
Drive units, clutch mechanism	Motors	Check motors		
	Check functions in drive and push modes	Check carbon brushes, replace if necessary		
	Check clutch mechanism	Replace motor if necessary.		
		Tighten screws/nuts, adjust or replace if necessary	See *6.6.1 Replacing Motor-Gearbox Unit, page 25*, *6.6.4 Replacing Motor-Gearbox Unit (Storm4 X-plore), page 28* and *6.6.3 Replacing or Rotating Motor-Gearbox Unit Sealing Ring (SSD Motor), page 27*	
Brakes	Inspect motor brake	Check motor brake		
Legrests	Check welded seams, interlocking, screws, footplates	Tighten, replace if necessary		
Powered elevating legrests (if fitted)	Check cable	Replace cable if necessary		
	Check contacts			
	Check functions			
Lighting (if fitted)	Check cable	Replace lamp or cable if necessary	See “Lighting unit”	
	Check function			
Battery mounting	Check battery support and mounting belts for damage	Replace if necessary		
Batteries	Check batteries for damage	Replace batteries if necessary	See *6.10.4 Removing Batteries, page 76* and *6.10.2 Handling Damaged Batteries Correctly, page 75*	
	Check battery voltage	Charge batteries	See user manual	

Component	Check	Remedy	Notes	✓
	Check contacts and terminals	Clean contacts and terminals	See safety information under *6.10.4 Removing Batteries, page 76* and *6.10.2 Handling Damaged Batteries Correctly, page 75*	
Remote / Power modules	Remote, status display blinking	Evaluate error/blink code	See remote manual and controls manual.	
	Fixings	Tighten fixings, replace if necessary		
	Cables and connecting plugs	Tighten cables and connecting plugs, replace if necessary		
	Joystick function	Replace joystick knob if necessary		
		Replace remote if necessary		
	Power supply	Tighten cables and connecting plugs, replace if necessary		
Drive program	Check Chair configuration file	Update software if newer version available.	See “Updating software”	
Screws	Check screws for tight fit	Tighten screws if necessary		

6.6 Drive Components

6.6.1 Replacing Motor-Gearbox Unit

CAUTION!
Risk of crushing
Mobility device is very heavy. Risk of injury to hands and feet.
– Use proper lifting techniques.

CAUTION!
Risk of injury caused by uncontrolled movement of mobility device
– Switch power supply off (ON/OFF key).
– Engage drive.
– Before raising mobility device, secure wheels by blocking them with wedges.

CAUTION!
Risk of crushing
The motor-gearbox unit is extremely heavy. Risk of injury to hands.
– Note high weight.

- 6 mm Allen key
- 13 mm wrench
- Oblong wooden blocks (at least 14 x 14 x 30 cm)

Removing Unit

1. Remove rear and centre battery shroud as described in *6.8.1 Replacing Rear Shroud, page 556.8.1 Replacing Rear Shroud, page 55* and *6.8.2 Replacing Centre Shroud, page 55*.
2. Pull motor plug out of power module.
3. Open the cable clamps and expose motor cable.
4. Remove drive wheel. See *6.7.7 Replacing Drive Wheel (5–Screw Installation), page 52*.
5. Remove wheel hub. See *6.7.10 Replacing Drive Wheel Hub, page 54*.
6. Remove fender. See *6.8.7 Replacing Fender, page 57*.
7. Loosen bolts (1).
8. Remove bolts together with nuts and washers.
9. Pull motor-gearbox unit (3) out of motor swing arm (2) in a forward direction. In doing so, observe high weight of unit.

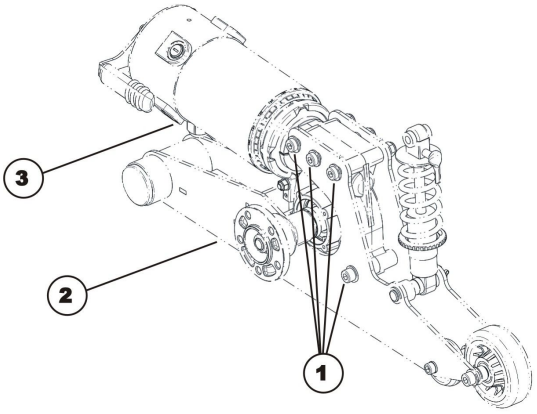

Fig. 6-5

Installing Unit

1. Replace defective parts.
2. Check serial number of gearbox housing.

   Up to serial number 20110400xx, gearbox housing is 44.5 mm wide: The compensation sheet (see above) must be installed.
   As of serial number 20110400xx, gearbox housing is 49.5 mm wide: The compensation sheet is not necessary.

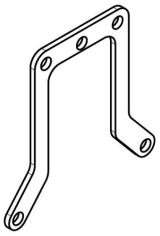

Fig. 6-6

3. Install parts in reverse order.
4. Use scale to align motor to centre axis (1).
   - Left motor: 185°
   - Right motor: 5°

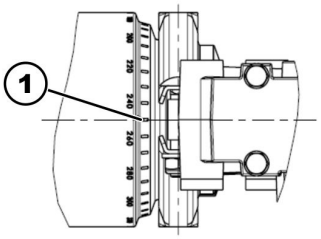

Fig. 6-7

5. Make sure that motor cable cannot be pinched or bent, and that it is not exposed to chafing in any place.
6. If LiNX system is used, perform calibration process. See *Suggested programing procedure* in LiNX service manual.
7. Test all functions.

6.6.2 Replacing Motor-Gearbox Coupling (SSD Motor)

CAUTION!
Risk of crushing
The motor-gearbox unit is very heavy. Risk of injury to hands.
– Pay attention to the heavy weight.

- 10 mm socket wrench

Removing Motor-Gearbox Coupling

1. Remove motor-gearbox unit. See *6.6.1 Replacing Motor-Gearbox Unit, page 25* or *6.6.4 Replacing Motor-Gearbox Unit (Storm⁴ X-plore), page 28*.
2. 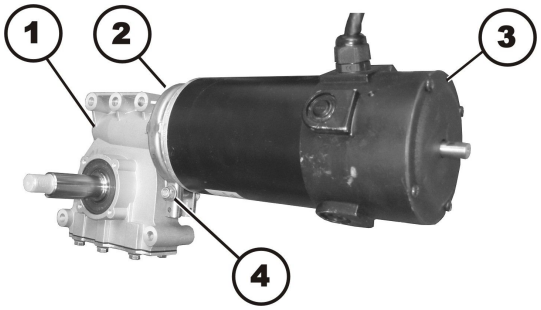

   Loosen and remove self-securing nut (4).
3. Remove carriage bolt, which secures the sealing ring (2).
4. Carefully bend sealing ring apart and remove it.

> **WARNING!**
> **Risk of damage to the mobility device if the coupling is not serviced correctly.**
> – Be careful not to damage the coupling mechanism during maintenance work.

5. Carefully pull motor (3) and gearbox (1) apart.
6. Remove component parts of the coupling.
7. If necessary replace the coupling.

Installing Motor-Gearbox Coupling

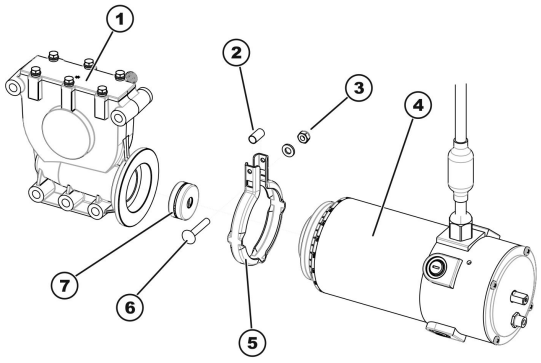

1. Place new clutch (7) on the motor axle. Pay attention to the position of the groove.
2. Position locking ring (5) on motor (4) or gearbox (1).
3. Carefully insert motor into gearbox. Pay attention to the position of the groove in the axle of the gearbox. If necessary, rotate motor and gearbox to correct position.
4. Insert carriage bolt through locking ring. Do not forget spacer sleeve (2).
5. Install washer and self-locking nut.
6. Do not tighten self-locking nut completely, as the motor orientation must be adjusted during installation.
7. Install motor-gearbox unit. See *6.6.1 Replacing Motor-Gearbox Unit, page 25*.

6.6.3 Replacing or Rotating Motor-Gearbox Unit Sealing Ring (SSD Motor)

> **CAUTION!**
> **Risk of crushing**
> The motor / gearbox unit is very heavy. Risk of injury to hands.
> – Pay attention to the heavy weight.

- 10 mm socket wrench

Removing Sealing Ring

1. Removing motor-gearbox unit. See *6.6.1 Replacing Motor-Gearbox Unit, page 25* or *6.6.4 Replacing Motor-Gearbox Unit (Storm4 X-plore), page 28*.
2. Loosen and remove self-securing nuts (4) including washers.
3. Remove carriage bolt, which secures the sealing ring (2).
4. Carefully bend the sealing ring apart and remove it.

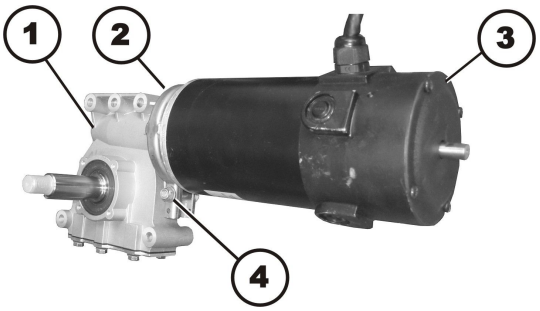

Fig. 6-8

Installing Sealing Ring

1. Install sealing ring so that the square hole for the carriage bolt is on the inside of the mobility device.
2. Insert carriage bolt through the sealing ring.
3. Install washer and self-locking nut.
4. Do not tighten self-locking nut completely, as the motor orientation must be adjusted during installation.

6.6.4 Replacing Motor-Gearbox Unit (Storm4 X-plore)

CAUTION!
Risk of crushing
Mobility device is very heavy. Risk of injury to hands and feet.
– Use proper lifting techniques.

CAUTION!
Risk of injury caused by uncontrolled movement of mobility device
– Switch power supply off (ON/OFF key).
– Engage drive.
– Before raising mobility device, secure wheels by blocking them with wedges.

CAUTION!
Risk of crushing
The motor-gearbox unit is extremely heavy. Risk of injury to hands.
– Note high weight.

- 5 mm Allen key
- 6 mm Allen key
- 13 mm wrench
- 19 mm wrench
- Oblong wooden blocks (at least 14 x 14 x 30 cm)

Removing Unit

1. Remove rear and centre battery shrouds as described in *6.8.1 Replacing Rear Shroud, page 55* and *6.8.2 Replacing Centre Shroud, page 55*.
2. Pull motor plug out of power module.
3. Open cable clamps and expose motor cable.
4. Remove drive wheel. See *6.7.7 Replacing Drive Wheel (5–Screw Installation), page 52*.
5. Remove wheel hub. See *6.7.10 Replacing Drive Wheel Hub, page 54*.
6. Remove fender. See *6.8.7 Replacing Fender, page 57*.
7. Remove SL retainer clip (4).
8. Remove spacer (3).
9. Carefully remove bolt (1) which connects suspension strut (2) to rear bracket of upper suspension (5).
10. Loosen bolts (6).
11. Remove bolts together with nuts and washers.

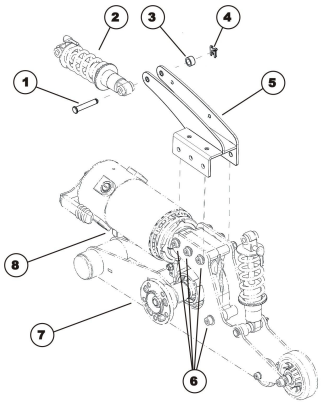

Fig. 6-9

Installing Unit

1. Replace defective parts.
2. Check serial number of gearbox housing.

   Up to serial number 20110400xx, gearbox housing is 44.5 mm wide: The compensation sheet (see above) must be installed.
   As of serial number 20110400xx, gearbox housing is 49.5 mm wide: The compensation sheet is not necessary.

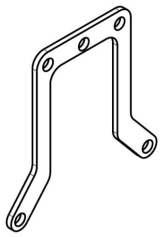

Fig. 6-10

3. Use scale to align motor to the centre axis (1).
   - Left motor: 185°
   - Right motor: 5°
4. Make sure that motor cable cannot be pinched or bent, and that it is not exposed to chafing in any place.
5. Install parts in reverse order.
6. If LiNX system is used, perform calibration process. See *Suggested programing procedure* in LiNX service manual.
7. Test all functions.

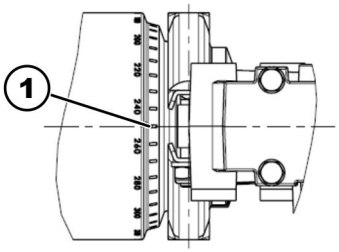

Fig. 6-11

6.6.5 Replacing and Calibrating True Track Plus Motor

We recommend to read this instruction before you begin to work.

First check whether mobility device is equipped with puncture-proof tyres or pneumatic tyres. Depending on whether mobility device is equipped with puncture-proof tyres or pneumatic tyres, process of removing and installing will be different. You can recognise puncture-proof tyres by the fact that they do not have a valve.

Replacing motor

WARNING!
Risk of crushing
Mobility device is very heavy. Risk of injury to hands and feet.
– Use proper lifting techniques.

CAUTION!
Risk of injuries caused by uncontrolled movement of mobility device
– Turn off power supply (ON/OFF key).
– Engage drive.
– Before raising mobility device, secure wheels by blocking them with wedges.

CAUTION!
Risk of explosion
If mobility device is fitted with pneumatic tyres, wheel can explode if air is not released from tyre before removing wheel.
– Always release air from wheel before you remove it. Depress small tappet in center of valve.

WARNING!
Loss of wheel
If bolts which secure wheel are not tightened firmly enough, or if threaded holes in casing are damaged by being tightened too much, wheel can come loose during travel.
– Always position nuts manually in their holes when fitting drive wheels.
– Never use electrical or pneumatic screwdrivers.
– Tighten Allen screws with a torque of 25 Nm.
– Nordlock washers must be fitted exactly as they were before removal.

Warranty on True Track Plus motors: If motors become defective within their warranty period, they will either be replaced or repaired on Invacare decision. This warranty does not cover pay for working hours. We also accept no liability for physical injuries or unauthorised repairs. Invacare sole obligation and its exclusive remedy during this is limited to such repair and/or replacement measures.

- Oblong wooden blocks (at least 14 x 14 x 30 cm)
- 2,5 mm Allen key
- 3 mm, 4 mm, 6 mm Allen keys
- Small flat screwdriver
- Circlip pliers
- Loctite 243
- 13 mm combination wrenches (2x)
- Hammer
- Chisel
- Torque wrench
- New hexagonal dome headed bolt, M8, 20 mm long, 5 mm key size
- **Additional parts and tools for working on puncture-proof tyres:**
  – Tyre lubrication (soap-based)
  – 3 screws M8 x 20 mm (for preliminary positioning of rim during assembly)

When disassembling, take care of small parts such as screws and washers. Put all small parts down so that they can be reassembled in right sequence.

1. Prop up mobility device by lifting it up on that side that you want to work on. Place wooden block underneath battery box on that side.

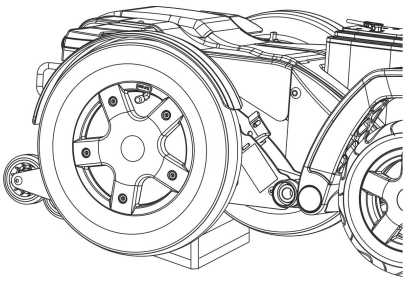

Fig. 6-12

2. Loosen and remove cable covering caps on motors.
3. Loosen ring terminal ends on motors.

Fig. 6-13

Removing Tyre and Rim on Mobility Device with Pneumatic Tyres

CAUTION!
Risk of explosion
If mobility device is fitted with pneumatic tyres, wheel can explode if air is not released from tyre before removing wheel.
– Always release air from wheel before you remove it. Depress small tappet in center of valve.

1. Loosen and remove valve cap.
2. Depressurise tyre by pressing pin in valve (1).
3. Loosen and remove 5 screws (2).
4. Remove wheel rim half with inner tube.

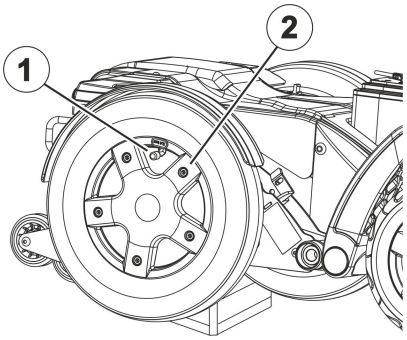

Fig. 6-14

Removing Tyre and Rim on Mobility Device with Puncture-Proof Tyres

WARNING!
Risk of damage to motor if screws are not loosened and removed in correct sequence
– Make sure you loosen and remove screws in correct sequence.

Screws 1 to 5 must be loosened and removed in particular sequence in relation to each other. There is no pre-defined numbering for screws. There is, for example, no screw with pre-defined number "1". For this reason, you can start with any screw as "Number 1". "Number 2" is then screw next to it in clockwise direction, "3" is next and so on.

1. Loosen and remove screws 1 and 3.
2. Loosen screws 2, 4 and 5 a single turn each, one after other, going from screw to screw in a clockwise direction, until they have all been completely loosened and removed.
3. Remove rim-half and puncture-proof inlay from wheel.

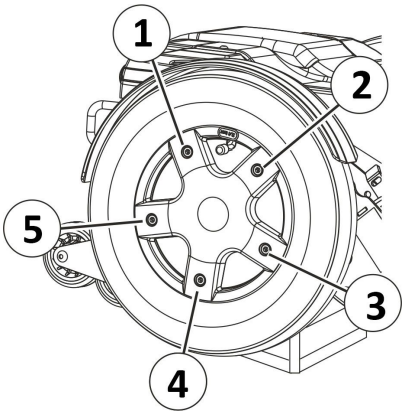

Fig. 6-15

Removing Motor

1. Remove batteries as described in *6.10.3 Making Batteries Accessible, page 75* and *6.10.4 Removing Batteries, page 76*.
   Risk of crushing
   True Track Plus motor unit is extremely heavy. Risk of injury to hands.
   – When disassembling, note that True Track Plus motor is extremely heavy.

> ⚠ **CAUTION!**
> **Risk of crushing**
> True Track Plus motor unit is extremely heavy. Risk of injury to hands.
> – When disassembling, note that True Track Plus motor is extremely heavy.

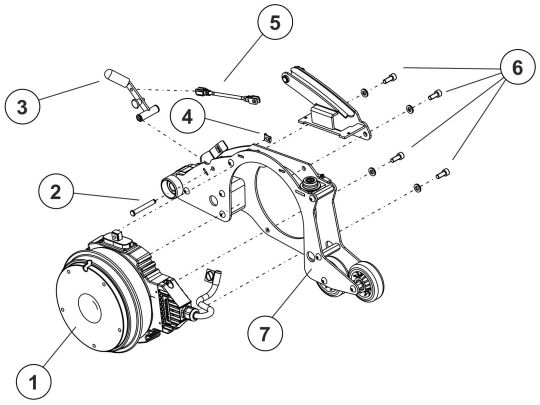

Fig. 6-16

1. Loosen and remove four screws (1) of motor.
2. Remove motor swing arm (7).
3. Remove brake lever (3) and threaded rod for brake lever (5).
4. Remove motor.
5. Install drive unit in reverse order.
6. Tighten wheel screws to 25 Nm.

Installing Rim and Tyre on Mobility Device with Pneumatic Tyres

> ! **Risk of damage**
> Screwing screws in too deep or tightening them severely can cause damage to the inside.
> – Pay attention to correct length of screws. Only use screws no longer than 20 mm.
> – Only use original Invacare screws and washers.
> – Tighten screws with the prescribed tightening torque.

1. Position inner-tube in tyre.
2. Install rim-half.
3. Position screws and tighten them a little.
4. Fill inner-tube with a little air.
5. Tighten screws that hold rim.
6. Check to make sure tyre is fitted snugly to rim.
7. Pump up tyre to prescribed air pressure.
8. Check again to make sure tyre fits rim correctly.
9. Screw on valve cap.

Installing Rim and Tyre on Mobility Device with Puncture-Proof Tyres

> ! **Risk of damage**
> Screwing screws in too deep or tightening them severely can cause damage to the inside.
> – Pay attention to correct length of screws. Only use screws no longer than 20 mm.
> – Only use original Invacare screws and washers.
> – Tighten screws with the prescribed tightening torque.

1. To install a tyre with a puncture-proof core, coat inner and outer edges of tyre (1 and 3) and inner surface of puncture-proof inlay (2) with tyre lubrication.

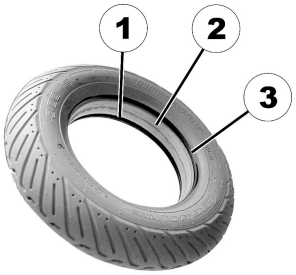

Fig. 6-17

2. Push tyre with puncture-proof inlay onto motor (rotor casing).

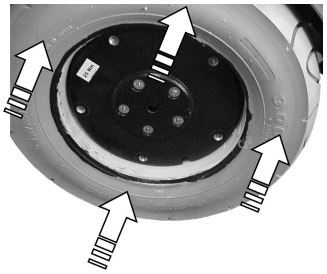

Fig. 6-18

3. Position rim-half in tyre. The holes for screws in rim-half and ones in rotor casing need to be aligned with each other. It can be helpful to align the notch in rim-half and one in rotor casing where valve would usually be, using them as a positioning guide.
4. Insert five M8 x 20 mm screws and washers at positions (1), (2), (3), (4) and (5) and tighten them hand-tight gradually by hand according to scheme.

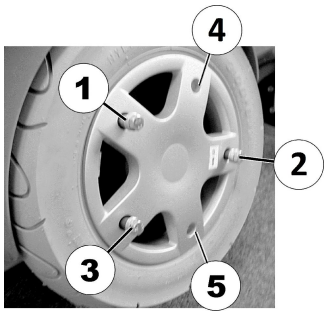

Fig. 6-19

5. Tighten all screws to 25 Nm according to scheme.

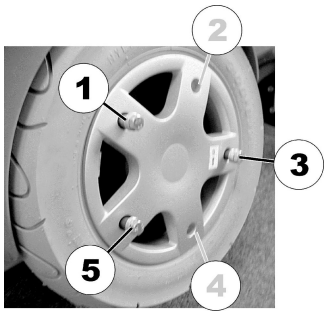

Fig. 6-20

Calibrating True Track Plus Motor

The following section explains the calibration process with a handheld programming device.

WARNING!
Risk of accidents
Risks to workers, surroundings and mobility device.
– Do not leave mobility device unattended during following procedure.
– Make sure that both drive wheels are raised and can not touch ground.
– Secure area.

- Dynamic DX HHP" handheld programming device

1. Prop up mobility device with wooden blocks. Drive wheels must not be touching floor or work surface.
2. Connect programming device.

The programming device shows the following	You should enter this
DX HHp V1.20 Select a language... GB D NL S	"GB"
View or edit System? YES ? DIAG TECH	"TECH"
Technician mode Enter Password 000 EXIT D1 D2 D3	Enter code "592" with keys D1 to D3, then select "EXIT".
Technician mode Master JS Module JOYSTICK CALIBRATION EXIT YES NEXT	"NEXT"
** MAIN MENU ** View or edit GB Power Module ? NEXT YES	"YES"
GB Controller Torque XX % EXIT NEXT DOWN UP	"NEXT"
GB Controller Tremor Damping XX % EXIT NEXT DOWN UP	"NEXT"
GB Controller Speed Progression XX % EXIT NEXT DOWN UP	"NEXT"
GB Controller Turn Progression XX % EXIT NEXT DOWN UP	"NEXT"
GB Controller Calibrate Motors? EXIT NEXT YES	"YES"
GB MOTOR CALIBRATION Wheels will move! Drive wheels raised? EXIT YES	"YES" (if drive wheels have been raised)
GB MOTOR CALIBRATION Chair will drive! Are wheels raised? EXIT YES	"YES" (if drive wheels have been raised)
GB MOTOR CALIBRATION -BEGIN- to start. Wheels will drive! EXIT BEGIN	"BEGIN" (if drive wheels have been raised)
GB MOTOR CALIBRATION in progress Please wait.	No entry required. Wait till end of calibration.
GB MOTOR CALIBRATION Successful! EXIT	"EXIT"

3. Separate programming device from mobility device. Calibration is complete.

Replacing Relay

- Phillips screwdriver size 2
- 3 mm Allen key
- 4 mm Allen key
- 8 mm socket wrench

Before replacing the relay, make it accessible.

1. If possible, use lifter to move seat to uppermost position.
2. Turn off controls on remote.
3. Remove seat plate or sling seat (1). See Modulite manual *Adjusting seat width (Modulite seat)*.
4. Remove shroud (2).

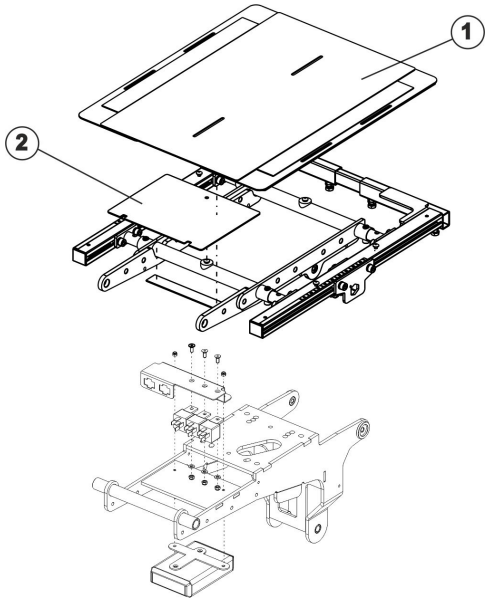

Fig. 6-21

Removing Relay

1. Loosen fixation screw (5).
2. Flip shroud (6) down.
3. Loosen and remove both fixation screws.
4. Remove relay (8)(9) including mountings (3)(10).
5. Loosen five Allen screws (11) and remove screws including washers and nuts form mountings.
6. Replace relay.

> When disassembling, take care of small parts such as screws and washers. Put all small parts down so that they can be reassembled in right sequence.

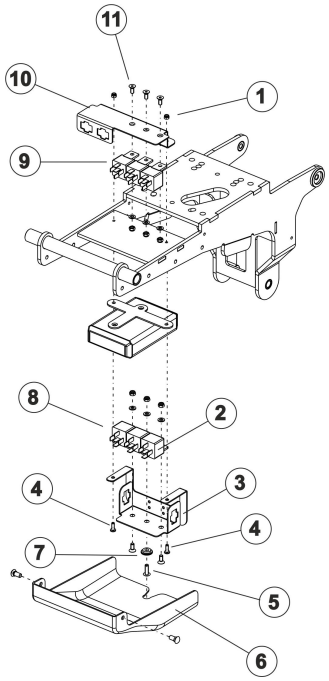

Fig. 6-22

Refitting Relay

1. Install parts in reverse order.
2. Test all functions.

6.6.6 Replacing Carbon Brushes

> This chapter refers to Storm4, Storm4 X-plore and Storm4 Max.

> Always replace all carbon brushes on both motors.

> DuraWatt motors are service-free, due to lifetime brushes.

CAUTION!
Risk of crushing
Mobility device is very heavy. Risk of injury to hands and feet.
– Use proper lifting techniques.

- 5 mm Allen key
- 6 mm Allen key
- 10 mm wrench (SSD motors only)
- 19 mm wrench
- Flat screwdriver (large)
- Oblong wooden blocks (at least 14 x 14 x 30 cm)

Removing Carbon Brushes

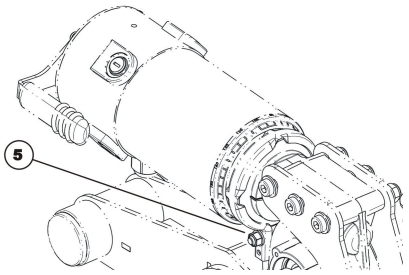

Fig. 6-23

SSD motors allow you to access the rear carbon brushes more easily by turning the motor around after loosening nut (5).

Make sure to turn the motor back into its original position after replacing the carbon brushes!

1. Switch OFF mobility device.
2. Remove drive wheel. See *6.7.7 Replacing Drive Wheel (5–Screw Installation), page 52*.
3. Disengage motor.
4. Loosen and remove all plastic caps (3).
5.

   To guarantee optimum contact to the collector used carbon brushes need to be refitted exactly in same position from which they were taken.

   Make marking on motor and carbon brushes to guarantee correct re-installing.
6. Remove carbon brushes completely from mounting (2).
7. Check carbon brush and spring for level of wear, broken components or discolouration.

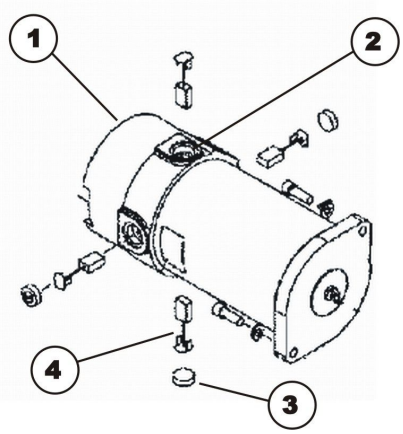

Fig. 6-24

Installing Carbon Brushes

1. Depending on condition of brush and spring:
   - either replace brushes in exactly the same position from which they were taken or
   - fit new brushes.
2. Refit plastic caps and tighten firmly.
3. If necessary, turn motor into original position and tighten nut (5) fingertight.
4. Install drive wheels. See *6.7.7 Replacing Drive Wheel (5–Screw Installation), page 52*.
5. Run in new carbon brushes.

Run In New Carbon Brushes

The following procedure is necessary to run carbon brushes in after replacement and thus guarantee maximum performance.

CAUTION!
Risk of accidents
Risk to workers, surroundings and mobility device.
– Do not leave mobility device unattended during following procedure.
– Secure area.

1. Lift mobility device on one side and place a 14 cm high wooden block underneath it so that drive wheel is off ground and can rotate freely. Use proper lifting techniques.
2. Repeat this on other side of mobility device.
3. Run motors for an hour in forward direction.
4. Allow motors to cool down for 30 minutes.
5. Run motors for an hour in reverse direction.
6. Lift mobility device off wooden blocks.

6.6.7 Replacing Engaging Turn Knob

When replacing the engaging turn knob, you must ensure that the correct fitting position is used during assembly.

- 3 mm Allen key

1.

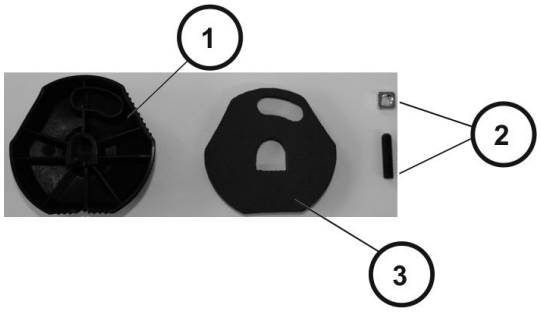

Fig. 6-25

Screw shim onto grub screw.
2. Place screw joint in engaging turn knob (rear side (1)).
3.

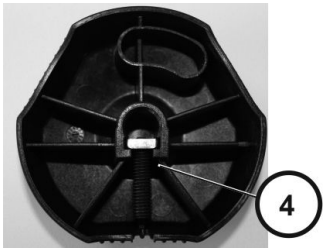

Fig. 6-26

Check that screw joint (4) is positioned precisely in engaging turn knob.
4. Place nonwoven fabric (3) in engaging turn knob (rear side (1)).
5.

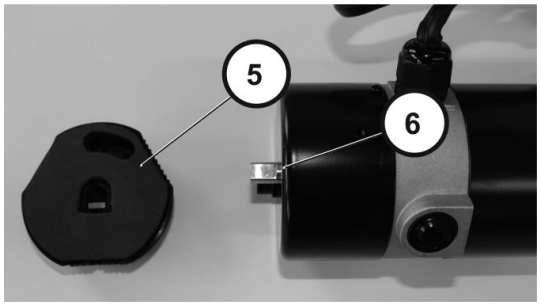

Fig. 6-27

When installing engaging turn knob (5) make sure that position (6) is correct.

6.

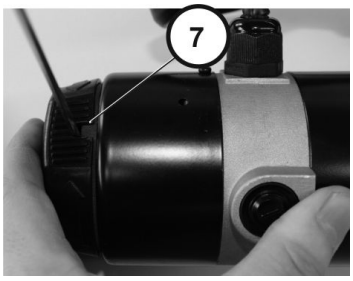

Fig. 6-28

Tighten bolt (7).

7.

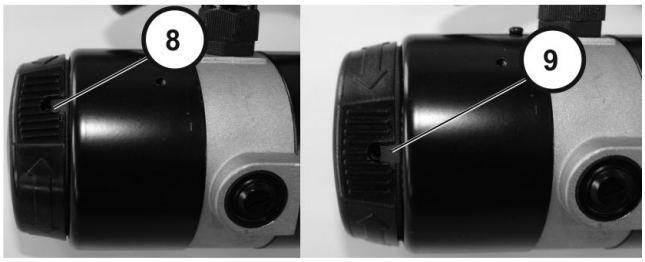

Fig. 6-29

Check that engaging turn knob can be turned to "push" position (clockwise) and "drive" position (counterclockwise).

6.6.8 Replacing Motor Swing Arm

This chapter refers to Storm4, Storm4 X-plore and Storm4 Max.

CAUTION!
Risk of Crushing to Hands and Feet by Weight of Mobility Device
– Pay attention to hand and feet.
– Use proper lifting techniques.

CAUTION!
Risk of Uncontrolled Movement of Mobility Device
– Turn off power supply (ON/OFF key).
– Engage drive.
– Before raising mobility device, secure wheels by blocking them with wedges.
– Prevent the mobility device tipping by propping it up on a wooden block which is long and wide enough under the battery case. If the wooden block is too short or too high, the mobility device can still tip.

- 5 mm Allen key
- 6 mm Allen key
- TX40 Torx key
- 13 mm wrench
- 19 mm wrench
- Flat screwdriver
- Oblong wooden blocks (at least 14 x 14 x 30 cm)

Removing Motor Swing Arm

1. Remove drive wheel. See *6.7.7 Replacing Drive Wheel (5–Screw Installation), page 52*.
2. Remove motor-gearbox unit. See *6.6.1 Replacing Motor-Gearbox Unit, page 25* , *6.6.4 Replacing Motor-Gearbox Unit (Storm⁴ X-plore), page 28* or *Replacing Drive Unit (Storm⁴ Max)*.
3. Loosen and remove nut (1).
4. Remove washer (9).
5. Remove bolt (6). Pay attention to washer (7) and spacer (8).
6. Remove plastic cap (4).
7. Loosen and remove screw (3) including washer (2).
8. Remove motor swing arm (5) from axle.

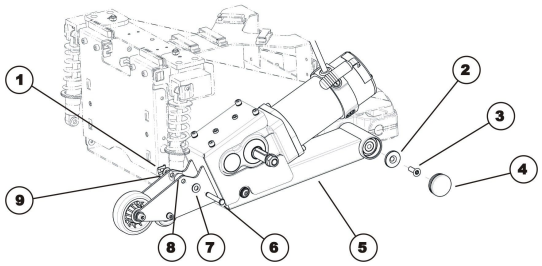

Fig. 6-30

Installing Motor Swing Arm

1. Install parts in reverse order.
2. Test all functions.

6.6.9 Replacing Suspension Strut

Invacare always recommends replacing both suspension struts to make sure that mobility device works perfectly.

Standard Storm⁴: The springs of the wheel suspension can be chosen from three weight classes according to the user's weight. The different weight classes are marked by dots on springs.

1 dot	0 … 70 kg user weight
2 dots	71 … 110 kg user weight
3 dots	111 … 150 kg user weight

CAUTION!
Risk of crushing
Mobility device is very heavy. Risk of injury to hands and feet.
– Use proper lifting techniques.

CAUTION!
Risk of crushing
Risk of injury caused by uncontrolled movement of mobility device.
– Switch off power supply (ON/OFF key).
– Engage drive.
– Before raising mobility device, secure wheels by blocking them with wedges.

- 4 mm Allen key
- 6 mm Allen key
- 13 mm socket spanner
- Oblong wooden blocks (at least 14 x 14 x 30 cm)

Removing Suspension Strut

1. Remove rear and centre shroud. See *6.8.1 Replacing Rear Shroud, page 55* and *6.8.2 Replacing Centre Shroud, page 55*.
2. Remove drive wheel. See *6.7.7 Replacing Drive Wheel (5–Screw Installation), page 52*.
3. Loosen and remove nut (1) from bolt (5) on spring.
4. Remove spacer (8).
5. Remove bolt. Pay attention to washer (7) and spacer (6).
6. Loosen and remove Allen screw (4) together with cover plate (3).
7. Remove pin (2). Pay attention to washers and spacers.
8. Remove suspension strut.

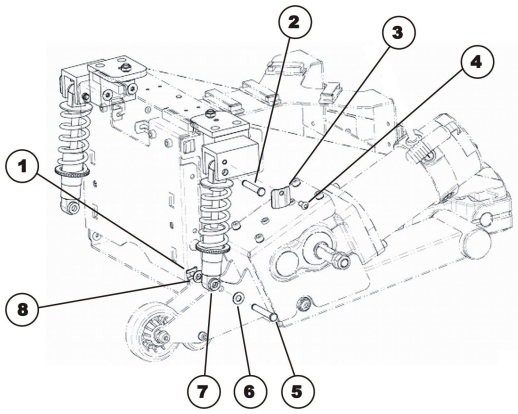

Fig. 6-31

Installing Suspension Strut

1. Install parts in reverse order.
2. Test all functions.

6.6.10 Replacing Upper Suspension Strut (only Storm4 X-plore)

Invacare always recommends replacing both suspension struts to make sure the mobility device works perfectly. The springs of the wheel suspension can be chosen from two weight classes according to user's weight. Different weight classes are labelled using colored dots on the spring.

1 dot	up to 100 kg user weight
4 dots	over 100 kg user weight

CAUTION!
Risk of crushing
Mobility device is very heavy. Risk of injury to hands and feet.
– Use proper lifting techniques.

CAUTION!
Risk of injury caused by uncontrolled movement of mobility device
– Switch off power supply (ON/OFF key).
– Engage drive.
– Before raising mobility device, secure wheels by blocking them with wedges.

- Oblong wooden blocks (at least 14 x 14 x 30 cm)

Removing Suspension Strut

1. Lift mobility device onto several wooden blocks. Use proper lifting techniques.
2. Remove SL retainer clip (3).
3. Remove spacer (2).
4. Carefully remove bolt (5) which connects suspension strut (4) to suspension bracket (1).
5. Repeat procedure for rear bolt.
6. Remove suspension strut.

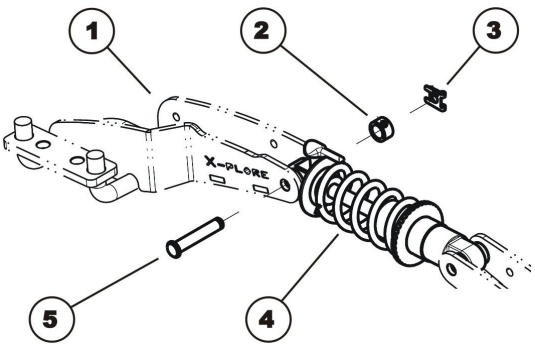

Fig. 6-32

Installing Suspension Strut

1. Install parts in reverse order.
2. Always make sure the suspension strut has been located correctly. Spring plates for setting spring preload must be at rear. Lever for setting shock absorption must be at top.
3. Test all functions.

6.6.11 Replacing Rear Compression Spring (True Track Plus Motor)

Invacare always recommends replacing both spring elements to make sure the mobility device works perfectly.

The springs of the wheel suspension can be chosen from three weight classes according to user's weight. In the case of True Track Plus motors, the compression springs are combined with elastomer springs which are placed inside compression springs. The following combinations are available:

Storm⁴

less than 80 kg	spring 625 N (2 dots) with red elastomer spring
70 kg to 100 kg	spring 625 N (2 dots) with dark blue elastomer spring
90 to 150 kg	spring 715 N (1 dot) with yellow elastomer spring

Storm⁴ X-plore

up to 100 kg	spring 625 N (2 dots) with red elastomer spring

CAUTION!
Risk of crushing
The mobility device is very heavy. Risk of injury to hands and feet.
– Use proper lifting techniques.

CAUTION!
Risk of crushing
Risk of injuries caused by uncontrolled movement of mobility device.
– Switch off power supply (ON/OFF key).
– Engage drive.
– Before raising mobility device, secure wheels by blocking them with wedges.

- 2,5 mm Allen key
- 3 mm Allen key
- TX40 wench
- Oblong wooden blocks (at least 14 x 14 x 30 cm)

Removing Spring Elements

1. Remove drive wheel. See *6.7.7 Replacing Drive Wheel (5–Screw Installation), page 52*.
2. Remove cable on motor: Loosen screws on shroud. Loosen and remove terminal ends. Remove plug connection.

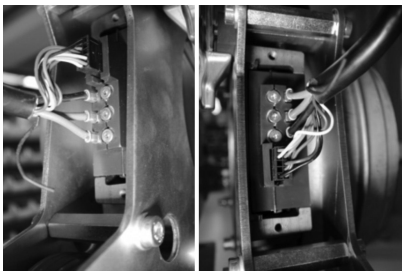

Fig. 6-33

3. Loosen and remove screw (4). Pull motor swing arm (3) away from chassis until spring element comprising compression spring and elastomer spring (1) can be removed. When doing so, lift motor swing arm so that rubber stopper is not loaded. This prevents damage.
4. Replace spring element (1).

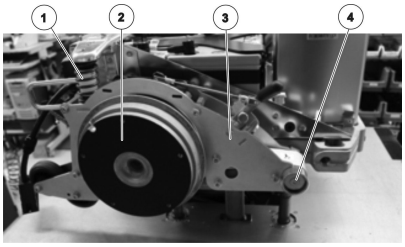

Fig. 6-34

Installing Spring Elements

1. Install parts in reverse order.
2. Grease bearing bolt of motor swing arm and replace motor swing arm (3).
3. Place spring element (1) on top, lift motor swing arm and push them further on until rubber stopper is contacting stop.
4. Retighten motor swing arm.
5. Reconnect motor cable with motor. Note torques.
6. When refitting cable shroud and tension relief, make sure that they are seated correctly. The union is eccentric, narrow side is facing inwards.
7. Install drive wheel, see *6.7.7 Replacing Drive Wheel (5–Screw Installation), page 52*.
8. Test all functions.

6.6.12 Replacing Castor Fork

CAUTION!
Risk of Crushing to Hands and Feet by Weight of Mobility Device
– Pay attention to hand and feet.
– Use proper lifting techniques.

CAUTION!
Risk of Uncontrolled Movement of Mobility Device
– Turn off power supply (ON/OFF key).
– Engage drive.
– Before raising mobility device, secure wheels by blocking them with wedges.
– Prevent the mobility device tipping by propping it up on a wooden block which is long and wide enough under the battery case. If the wooden block is too short or too high, the mobility device can still tip.

- 19 mm wrench
- Flat screwdriver

Oblong wooden blocks (at least 14 x 14 x 30 cm)

Removing Fork

1. Prop up mobility device using several wooden blocks. Use proper lifting techniques.
2. Remove plastic cap (2).
3. Loosen and remove nut (3).
4. Pull castor fork (6) from front swing arm (1) in a downward direction. Pay attention to washers (4), spacers (5) and separable ball bearings (not visible in the illustration).

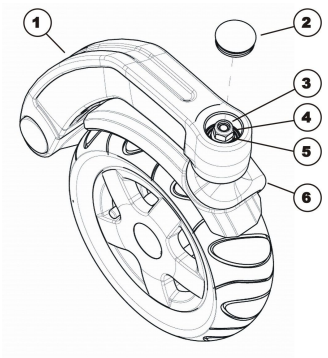

Fig. 6-35

Installing Fork

1. Install parts in reverse order.
2. When installing ball bearings, make sure that wide inner ring faces outward in each case.
3. Adjust castor fork as described in *6.6.13 Adjusting Castor Fork, page 43*.
4. Test all functions.

6.6.13 Adjusting Castor Fork

CAUTION!
Risk of crushing
Mobility device is very heavy. Risk of injury to hands and feet.
– Use proper lifting techniques.

- 19 mm socket wrench
- Blade screwdriver

1. Remove cover cap (2).
2. Tilt mobility device to rear. Use proper lifting techniques.
3. Rotate castor forks (5) upwards.
4. Let go of castor forks so that they can swing downwards again.
5. Adjust nut (3) so that castor forks are not too loose but can still rotate freely. The castor forks should reach opposite side once (maximum), then come to rest facing downwards.
6. Place mobility device on four wheels.
7. Test mobility device's manoeuvrability.
8. Repeat adjustment steps if necessary until castors are correctly adjusted.
9. Refit cap (2).

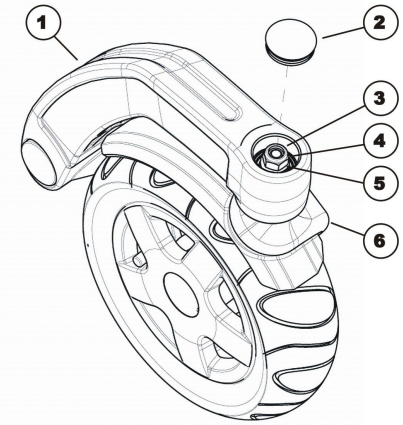

Fig. 6-36

6.6.14 Replacing Front Swing Arm

CAUTION!
Risk of crushing
Mobility device is very heavy. Risk of injury to hands and feet.
– Use proper lifting techniques. Risk of injury caused by uncontrolled movement of mobility device.
– Switch off power supply (ON/OFF key).
– Engage drive.
– Before raising mobility device, secure wheels by blocking them with wedges.

- 5 mm Allen key
- 17 mm Allen key
- Flat screwdriver
- 25 Nm torque wrench
- 200 Nm torque wrench
- Oblong wooden blocks (at least 14 x 14 x 30 cm)

Removing Front Swing Arm

1. Prop up mobility device, using several wooden blocks. Use proper lifting techniques.
2. Use screwdriver to remove plastic cap (5).
3. Loosen and remove Allen screw (4) with 17 mm Allen key.
4. Remove two Nord-Lock lock washers (3).
5. Remove and replace front swing arm (2).

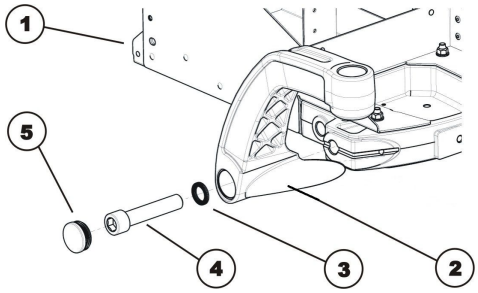

Fig. 6-37

Installing Front Swing Arm

1. Install parts in reverse order.
2. Tighten Allen screw (4) to 200 -180 Nm.
3. Test all functions.

6.6.15 Replacing Trim on Suspension Brackets (Storm4 X-plore)

- 4 mm Allen key

The procedure is identical for the front bracket (4) and the rear bracket of the upper suspension (5).

Removing Trim

1. Loosen two screws (3).
2. Remove screws (3) together with washers.
3. Press trim (1) out of front bracket (4) or rear bracket (5) from below. When doing so, take care with insert nuts (2).

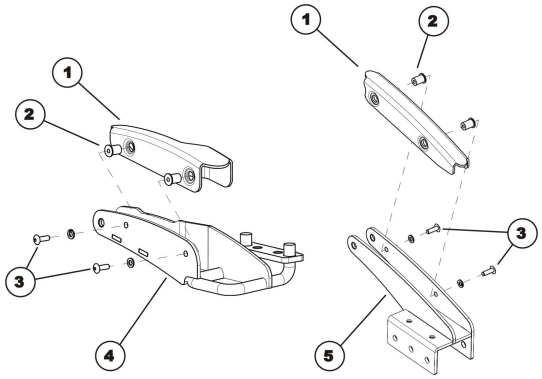

Fig. 6-38

Installing Trim

1. Install parts in reverse order.
2. Test all functions.

6.6.16 Replacing Front Bracket of Upper Suspension (Storm4 X-plore)

CAUTION!
Risk of injury caused by uncontrolled movement of mobility device
– Switch off power supply (ON/OFF key).
– Engage drive.
– Before raising mobility device, secure wheels by blocking them with wedges.

- Flat screwdriver

Removing Front Suspension Bracket

1. Remove trim if necessary. See *6.6.15 Replacing Trim on Suspension Brackets (Storm⁴ X-plore), page 44*.
2. Remove SL retainer clip (3).
3. Remove spacer (2).
4. Carefully remove bolt (5) which connects shock absorber (4) to swing arm (1).
5. Remove front swing arm, see *6.6.17 Replacing Front Swing Arm (Storm⁴ X-plore), page 45*.

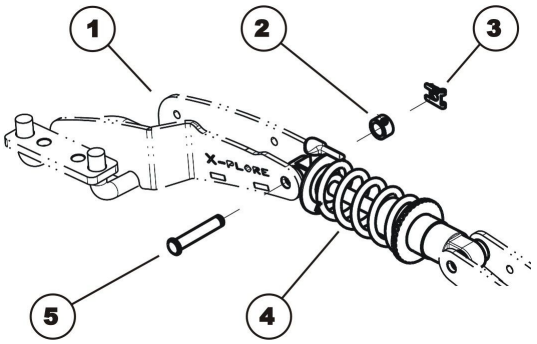

Fig. 6-39

Installing Front Suspension Bracket

1. Install parts in reverse order.
2. Test all functions.

6.6.17 Replacing Front Swing Arm (Storm⁴ X-plore)

CAUTION!
Risk of Crushing to Hands and Feet by Weight of Mobility Device
– Pay attention to hand and feet.
– Use proper lifting techniques.

CAUTION!
Risk of Uncontrolled Movement of Mobility Device
– Turn off power supply (ON/OFF key).
– Engage drive.
– Before raising mobility device, secure wheels by blocking them with wedges.
– Prevent the mobility device tipping by propping it up on a wooden block which is long and wide enough under the battery case. If the wooden block is too short or too high, the mobility device can still tip.

- 4 mm Allen key
- 5 mm Allen key
- 6 mm Allen key
- 17 mm Allen key
- Blade screwdriver
- 25 Nm torque wrench
- 200 Nm torque wrench
- Oblong wooden blocks (at least 14 x 14 x 30 cm)

Removing Front Swing Arm

1. Loosen and remove two screws (8). Take care of washers.
2. Use screwdriver to remove plastic cap (3).
3. Remove front bracket of upper suspension (1), see *6.6.16 Replacing Front Bracket of Upper Suspension (Storm⁴ X-plore), page 44*.
4. Loosen and remove screw (4).
5. Remove washer (5).
6. Remove sliding bearing (6).
7. Remove and replace front swing arm (2). Take care with sliding bearing (7).

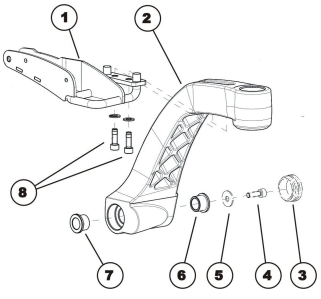

Fig. 6-40

Installing Front Swing Arm

1. Install parts in reverse order.
2. Test all functions.

6.6.18 Replacing Rear Bracket of Upper Suspension (Storm4 X-plore)

CAUTION!
Risk of crushing
The mobility device is very heavy. Risk of injury to hands and feet.
– Use proper lifting techniques.

CAUTION!
Risk of injury caused by uncontrolled movement of mobility device
– Switch off power supply (ON/OFF key).
– Engage drive.
– Before raising mobility device, secure wheels by blocking them with wedges.

- 5 mm Allen key
- 6 mm Allen key
- 13 mm wrench
- Flat screwdriver
- Oblong wooden blocks (at least 14 x 14 x 30 cm)

Removing Rear Suspension Bracket

1. Remove drive wheel. See *6.7.7 Replacing Drive Wheel (5–Screw Installation), page 52*.
2. Remove fender. See *6.8.7 Replacing Fender, page 57*.
3. Remove trim if necessary. See *6.6.15 Replacing Trim on Suspension Brackets (Storm4 X-plore), page 44*.
4. Remove SL retainer clip (4).
5. Remove spacer (3).
6. Carefully remove bolt (1) which connects suspension strut (2) to suspension bracket (5).
7. Loosen three screws (6).
8. Pull suspension bracket (5) out of motor swing arm (7) and replace it.

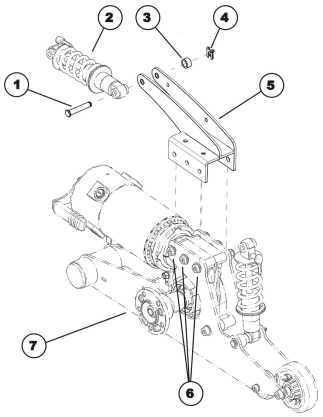

Fig. 6-41

Installing Rear Suspension Bracket

1. Install parts in reverse order.
2. Test all functions.

6.7 Wheels

6.7.1 Repair Instructions

Important information about maintenance work tools!
– Some maintenance work which is described in this manual and can be carried out by the user without problems require the correct tools for proper work. If you do not have the correct tool available we do not recommend that you try to carry out the relevant work. In this case, we urgently recommend that you contact an authorised specialist workshop.

The following are instructions on maintenance and repairs that can be performed by the user. For the specifications of spare parts please see *Technical Data*, or consult the service manual, available from Invacare (in this connection please see the addresses and phone numbers at the end of this user manual). In case you require assistance, please contact your Invacare dealer.

CAUTION!
Risk of damage or injury if the mobility device is accidentally set into motion during repairs
– Switch the power off (ON/OFF Button).
– Engage the motors.
– Secure the mobility device against rolling away by placing wedges under the wheels.

CAUTION!
Risk of hands and feet being crushed by the weight of the wheelchair
– Pay attention to your hands and feet.
– Use the correct lifting techniques.

6.7.2 Tyre Pressure

CAUTION!
Risk of damage to rim and tyre when tyre pressure is exceeded
– Observe recommended tyre pressure.

For recommended tyre pressure see inscription on tyre, rim, or contact Invacare. Compare table below for conversion.

psi	bar
22	1.5
23	1.6
25	1.7
26	1.8
28	1.9
29	2.0
30	2.1
32	2.2
33	2.3
35	2.4
36	2.5
38	2.6
39	2.7
41	2.8
42	2.9
44	3.0

6.7.3 Tyre Types

There are three different types of tyres or inner tubes, and specific points must be observed for the replacement of each type. The individual types of tyres can be easily distinguished:

- Pneumatic tyres have black valve caps.
- Puncture-protected tyres have red valve caps.
- Puncture-proof tyres have no valves.

There are five chapters about tyre repair and wheel replacement:

- *6.7.7 Replacing Drive Wheel (5–Screw Installation), page 52*
- *Replacing Drive Wheel (1-Bolt Installation)*
- *Replacing Castor Wheel on Double-Sided Fork*
- *6.7.9 Replacing Castor Wheels on Single-Sided Fork, page 53*
- *6.7.6 Replacing Tyres, page 50* deals with tube repair and replacing solid tyres.

Not all chapters are necessarily contained in this manual.

Specific tightening torques for wheels and rim halves are listed in *6.7.4 Specific Tightening Torques, page 48*.

6.7.4 Specific Tightening Torques

	Drive wheels						
	12 1/2" x 2 1/4"			14"			
					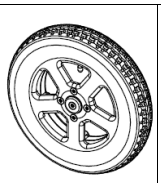		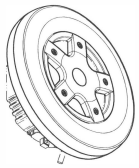
Wheel fixation	70 Nm	33 Nm	35 Nm	70 Nm	33 Nm	60 Nm	25 Nm
Rim halves	25 Nm	10 Nm	25 Nm	25 Nm	10 Nm	25 Nm	25 Nm

	Castor Wheels							
	6"	8"				9"	10"	
						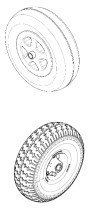	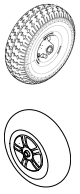	
Wheel fixation	18 Nm	18 Nm	16 Nm	16 Nm	25 Nm	25 Nm	18 Nm	100 Nm
Rim halves	10 Nm	25 Nm	—	—	—	25 Nm	25 Nm	25 Nm

6.7.5 Overview of Power Wheelchair Models and Wheel Types

- Not all wheel types are available for all power wheelchairs, see footnotes.
- The symbols indicate three tyre types:

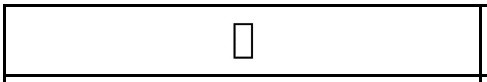		
pneumatic = black valve cap	puncture-protected = red valve cap	puncture-proof = no valve

Models	Drive wheels						
	12 1/2" x 2 1/4"			14"			
					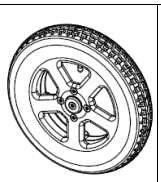		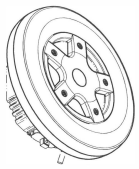
	3–Spoke Rim (1–Bolt Installation)	5–Spoke Rim (1–Bolt Installation)	5–Spoke Plastic Rim (1–Bolt Installation)	3–Spoke Rim (1–Bolt Installation)	5–Spoke Rim (1–Bolt In-stallation)*	5–Spoke Rim (5–Screw Installation)	5–Spoke Rim for True Track*
TDX SP2							
Storm4 Series						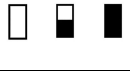	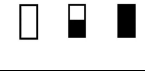
Kite							

Models	Drive wheels						
	12 1/2" x 2 1/4"			14"			
							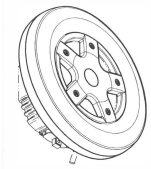
	3–Spoke Rim (1–Bolt Installation)	5–Spoke Rim (1–Bolt Installation)	5–Spoke Plastic Rim (1–Bolt Installation)	3–Spoke Rim (1–Bolt Installation)	5–Spoke Rim (1–Bolt Installation)*	5–Spoke Rim (5–Screw Installation)	5–Spoke Rim for True Track*
Bora	□ ■	□ ■					
Fox	□ ■		■				
Stream					■		
Mirage		□ ■	□				
Dragon		□ ■	□				

* For wheelchair-specific mounting instruction, see respective manual.

Models	Castor Wheels							
	6"	8"				9"	10"	
				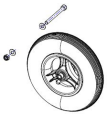	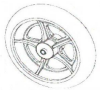	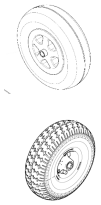	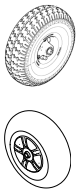	
	Single-Sided/ Double-Sided Fork	Double-Sided Fork				Double-Sided Fork	Double-Sided Fork	Single-Sided Fork
TDX SP2	■							
S4 Series							□ ■ ■	□ ■ ■
Kite						* * □ ■	□ ■ ■	□ ■ ■
Bora		■		□ ■	■	□ ■		
Fox		■	■					
Stream						■		

Models	Castor Wheels							
	6”	8”				9”	10”	
				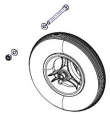		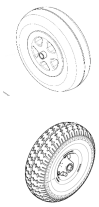	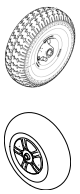	
	Single-Sided/ Double-Sided Fork	Double-Sided Fork				Double-Sided Fork	Double-Sided Fork	Single-Sided Fork
Mirage		■	□ ■		■			
Dragon						■		

* For wheelchair-specific mounting instruction, see respective manual.

6.7.6 Replacing Tyres

Repairing Pneumatic and Puncture-Protected Tyres

- 6 mm Allen key
- Tightening kit
- Oblong wooden block (at least 12 x 12 x 30 cm) for propping up mobility device
- Repair kit for tyre repair or a new inner tube
- Talcum powder
- Tyre pump or compressor

WARNING!
Risk of Injury
If tyre with one or more damaged rim threads is inflated, rim could burst and cause serious injury.
– Do not inflate tyre if one or more rim threads are damaged.
– Immediately replace rim with damaged threads.

WARNING!
Risk of Explosion
There is considerable pressure in the tyre. Risk of injury. Parts can be thrown out and injure you if you do not secure rim halves.
– Secure rim halves with joiner's clamps.

Risk of Damage to Rim Threads
Incorrectly tightened screws can cause damage to rim threads.
– Tighten rim screws with prescribed tightening torque.

1. Remove wheel as described in respective chapter in this manual.

CAUTION!
Risk of Damage by Gel When Repairing Puncture-Protected Tyres With Red Valve Caps
Valve can become blocked by the puncture protection gel and get unusable.
– During following work you should always hold up valve so that puncture protection gel cannot enter valve.

2. Remove valve cap.
3. Let air escape completely out of tyre by firmly pressing in pin in the centre of valve.

CAUTION!
Risk of Explosion
The wheel explodes if air pressure has not been released from wheel before wheel rim is removed.
– Always let all air out of tyre before removing rim.

4.

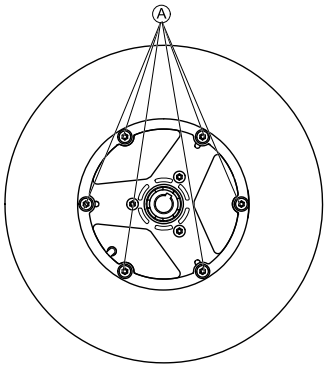

Fig. 6-42 This picture is an example.

Remove screws Ⓐ on inside of wheel.

5. Remove rim halves from wheel.
6. Remove inner tube from tyre.
7. Repair inner tube and re-fit it, or replace it with a new one.

If old inner tube has been repaired and is to be used again, and became wet during repair, it is easier to replace it if it is lightly dusted with talcum powder beforehand.

8. Install tyre in reverse order.
9. Apply rim halves to wheel.
10. Inflate tyre a little.
11. Place screws in wheel rim and tighten screws with prescribed torque. Make sure that inner tube is not clamped between wheel rim halves.
12. Make sure that tyre is contacting wheel rim directly.
13. Inflate tyre to prescribed pressure.
14. Make sure that tyre is still closely contacting wheel rim.
15. Screw valve cap on.
16. Install wheels according to instruction. See respective chapter.

Repairing Solid Tyre

- 6 mm Allen key
- 3 joiner's clamps with plastic caps

Risk of Damage to Rim Threads
Incorrectly tightened screws can cause damage to rim threads.
– Tighten rim screws with prescribed tightening torque.

1. Remove wheel as described in respective chapter in this manual.
2. Secure rim halves against unexpected discharge with three joiner's clamps. When doing so, make sure that you do not scratch rims.
3.

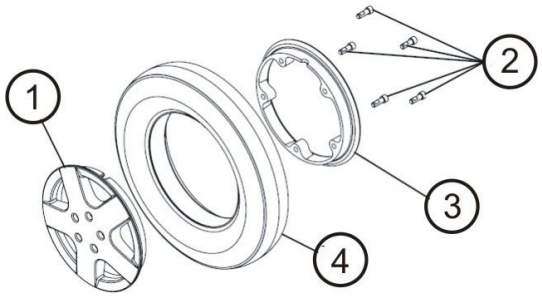

Fig. 6-43

Loosen and remove screws (2) on inside of wheel.

4. Loosen joiner's clamps carefully and alternately until you can remove rim halves without risk.
5. Remove inner (3) and outer (1) half of rim from tyre (4).
6. Replace any defective or worn parts.
7. Install tyre in reverse order.
8. When fitting rim halves together, make sure that drill holes and threads for screws are placed exactly on top of each other.
9. Place joiner's clamps in position.
10. Tighten joiner's clamps alternately in small stages until rim halves are precisely aligned.
11. Install and tighten screws.

12. Remove joiner's clamps.
13. Install wheel as described in respective chapter in this manual.

6.7.7 Replacing Drive Wheel (5–Screw Installation)

This chapter deals with drive wheels that are installed with four or five screws.

CAUTION!
Risk of Crushing to Hands and Feet by Weight of Mobility Device
– Pay attention to hand and feet.
– Use proper lifting techniques.

CAUTION!
Risk of Uncontrolled Movement of Mobility Device
– Turn off power supply (ON/OFF key).
– Engage drive.
– Before raising mobility device, secure wheels by blocking them with wedges.
– Prevent the mobility device tipping by propping it up on a wooden block which is long and wide enough under the battery case. If the wooden block is too short or too high, the mobility device can still tip.

- Torx wrench with TX 40 bit
- Torque wrench
- Mounting kit
- Oblong wooden block (at least 12 x 12 x 30 cm) for propping up mobility device

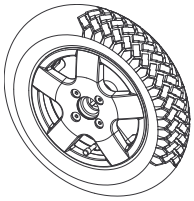

- 6 mm Allen key
- Torque wrench
- Oblong wooden block (at least 12 x 12 x 30 cm) for propping up mobility device
- Medium-strength thread locking adhesive (Loctite 243 or similar)

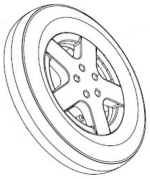

When removing, take care of small parts such as screws and washers. Put all small parts down so that they can be installed in correct sequence.

1. Remove legrests.
2. Place wooden block under frame to prevent mobility device from rolling away.
3. Loosen and remove screws which secure wheel.
4. Remove wheel from hub.
5.

CAUTION!
Risk of Injury if Wheels Come Off
If drive wheels are insufficiently tightened during assembly, they can come off during driving.
– Always use new screws with undamaged coating.
– Tighten screws to prescribed torque when mounting drive wheels.

Install parts in reverse order.
6. When installing wheel, pay attention to correct direction of rotation.

6.7.8 Replacing Drive Wheel (with True Track Plus motor)

CAUTION!
Risk of Crushing to Hands and Feet by Weight of Mobility Device
– Pay attention to hand and feet.
– Use proper lifting techniques.

CAUTION!
Risk of Uncontrolled Movement of Mobility Device
– Turn off power supply (ON/OFF key).
– Engage drive.
– Before raising mobility device, secure wheels by blocking them with wedges.
– Prevent the mobility device tipping by propping it up on a wooden block which is long and wide enough under the battery case. If the wooden block is too short or too high, the mobility device can still tip.

- 6 mm wrench
- Torque wrench
- Oblong wooden block (at least 12 x 12 x 30 cm) for propping up mobility device
- Medium-strength thread locking adhesive (Loctite 243 or similar)

When removing, take care of small parts such as screws and washers. Put all small parts down so that they can be installed in correct sequence.

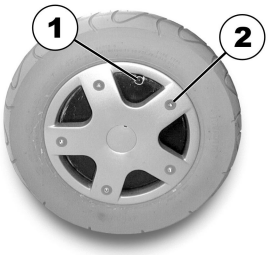

Removing wheel

1. Prop up mobility device.
2. Loosen and remove valve cap.
3. Depressurise tyre by pressing in pin in valve (1).
4. Loosen and remove screws (2) which secure wheel.
5. Remove wheel rim halves.
6. Remove inner tube from tyre.
7.

CAUTION!
Risk of Injury if Wheels Come Off
If drive wheels are insufficiently tightened during assembly, they can come off during driving.
– Always use new screws with undamaged coating.
– Tighten screws to prescribed torque when mounting drive wheels.

Install parts in reverse order.

8. When installing wheel, pay attention to correct direction of rotation.

6.7.9 Replacing Castor Wheels on Single-Sided Fork

- 24 mm wrench
- Oblong wooden block (at least 14 x 14 x 30 cm)

Removing Wheel

1. Place wooden block underneath mobility device and prop up mobility device.
2. Remove end-caps from bolt and nut (if applicable).
3. Remove nut and washer from bolt.
4. Remove bolt and wheel from fork.

Installing Wheel

1. Install parts in reverse order.
2. When installing wheel, pay attention to correct direction of rotation.
3. Tighten nut to prescribed torque. See *6.7.4 Specific Tightening Torques, page 48*.

Replacing Castor Wheel (TDX SP2)

- TX30 Torx key
- Oblong wooden block (at least 14 x 14 x 30 cm)

Removing Wheel

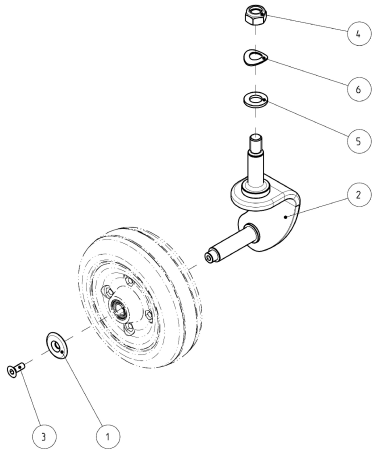

Fig. 6-44

1. Loosen and remove screw (3) including washer (1).
2. Remove castor.
3. Replace castor.

Installing Wheel

1. Install parts in reverse order.
2. When installing wheel, pay attention to correct direction of rotation.
3. Tighten screw (3).

6.7.10 Replacing Drive Wheel Hub

CAUTION!
Risk of damage to mobility device
Collisions can be caused if adjusting washers are removed during fitting work to drive wheels. Adjusting washers are often fitted between drive shaft and wheel hub to even out tolerances. If adjusting washers are removed and not replaced again, collisions can be caused.
– Always replace adjusting washers exactly as they were before you started dismantling.

- 19 mm socket wrench

Removing Drive Wheel Hub

1. Loosen and remove nut Ⓐ.
2. Remove washer Ⓑ.
3. Remove shim ring Ⓒ.
4. Remove wheel hub Ⓓ from axle Ⓕ.
5. Remove shim ring Ⓔ.
6. Remove feather key Ⓖ from axle.

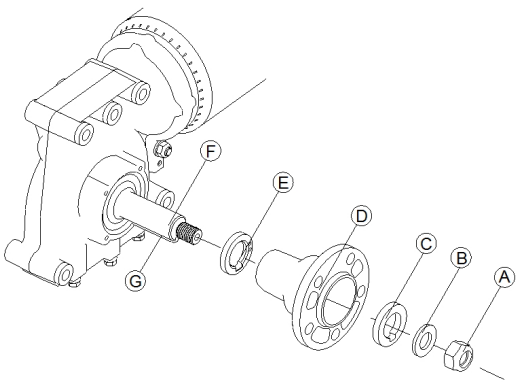

Fig. 6-45

Installing Drive Wheel Hub

1. Install drive wheel hub parts in reverse order.
2. Use thin film of lubricant to make pushing wheel hub onto axle easier.
3. Test all functions.

6.8 Shrouds

6.8.1 Replacing Rear Shroud

Removing Rear Shroud

1. Loosen and remove two knurled thumb screws (1) on left and right side of rear shroud.
2. Carefully raise rear shroud.
3. Front part of shroud is held at top by hook-and-loop strip.
4. You must also release this.

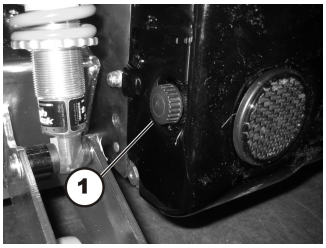

Fig. 6-46

Installing Rear Shroud

1. Install parts in reverse order.
2. Tighten knurled thumb screws finger-tight.

6.8.2 Replacing Centre Shroud

- 4 mm Allen key

Removing Centre Shroud

1. Remove rear shroud. See *6.8.1 Replacing Rear Shroud, page 55*.
2. If possible, use lifter to move seat to uppermost position.
3. Loosen two screws Ⓐ.
4. Lift rear part of shroud carefully and remove two spacers underneath shroud.
5. Lift off shroud. If mobility device does not have lifter, shroud must be bent apart carefully as shown in picture.

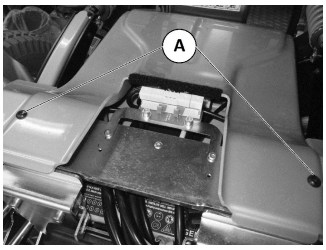

Fig. 6-47

Installing Centre Shroud

1. Install parts in reverse order.
2. Tighten screws finger-tight.

6.8.3 Replacing Front Shroud

- 4 mm Allen key

Removing Front Shroud

1. Use lifter to move seat to uppermost position. If no lifter is installed, remove seat as described in or *6.12 Seating, page 87*.
2. Remove rear and centre shroud. See *6.8.1 Replacing Rear Shroud, page 55* and *6.8.2 Replacing Centre Shroud, page 55*.
3. Loosen two screws (1) – concealed by motor in picture.
4. Pull motor cable and guide bushes (2) out of lateral recesses.
5. Pull connecting cable to seat out of recess (3).
6. Lift front shroud up so that retaining clips (4) are exposed.
7. Pull shroud off towards front.

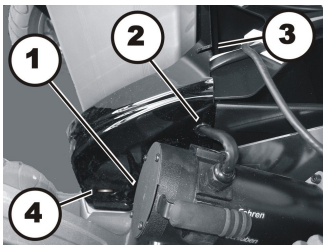

Fig. 6-48

Installing Front Shroud

1. Install parts in reverse order.
2. Make sure that retaining clips (4) snap securely into openings of shroud.
3. Tighten all screws finger-tight.

6.8.4 Replacing module shroud

- Installation kit
- Needlenose pliers
- Flat screwdriver

Module shroud protects cables.

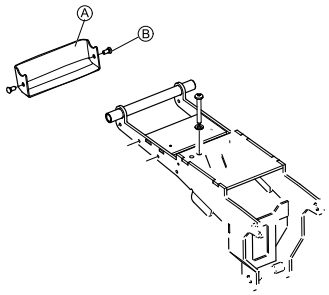

1. Remove both rivets Ⓑ.
2. Remove module shroud Ⓐ.
3. Install parts in reverse order.

6.8.5 Replacing Rear Light Shroud

- 4 mm Allen key
- 13 mm socket wrench

Removing Rear Light Shroud

1. Remove rear and centre shroud. See *6.8 Shrouds, page 55*.
2. Loosen nut (1) using a 13 mm socket wrench.

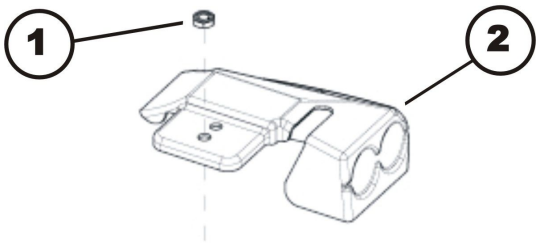

Fig. 6-49

Installing Rear Light Shroud

1. Install parts in reverse order.
2. Tighten screws finger-tight.

6.8.6 Replacing Front Fender

CAUTION!
Risk of Crushing to Hands and Feet by Weight of Mobility Device
– Pay attention to hand and feet.
– Use proper lifting techniques.

CAUTION!
Risk of Uncontrolled Movement of Mobility Device
– Turn off power supply (ON/OFF key).
– Engage drive.
– Before raising mobility device, secure wheels by blocking them with wedges.
– Prevent the mobility device tipping by propping it up on a wooden block which is long and wide enough under the battery case. If the wooden block is too short or too high, the mobility device can still tip.

- 4 mm Allen key
- 24 mm wrench
- Flat screwdriver
- Oblong wooden blocks (at least 14 x 14 x 30 cm)
- Medium-strength thread locking adhesive (Loctite 243 or similar)
- Heat gun

Removing Fender

1. Lift mobility device on one side and place wooden block underneath it, so that castor wheel is off ground and can rotate freely. Use proper lifting techniques.
2. Remove castor wheel. See *6.7.9 Replacing Castor Wheels on Single-Sided Fork, page 53*.
3. 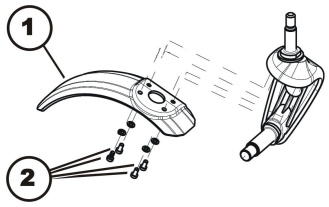

Fig. 6-50
Loosen and remove the four screws (2) together with washers.
4. Replace fender (1).

Installing Fender

1. Install parts in reverse order.
2. Test all functions.

6.8.7 Replacing Fender

- 5 mm Allen key

Use table to determine which fenders have to be used and whether fenders possibly have to be replaced. Different fenders have to be fitted depending on depth of seat, width of seat and seat support plates used.

Seat support	Seat depth in cm	Seat width in cm	fender long RH	fender long LH	fender short RH	fender short LH
Short	D=43	W=38	yes	yes	x	x
	D=43	W=43	yes	yes	x	x
	D=43	W=48	yes	yes	x	x
	D=43	W=53	yes	yes	x	x
	D=41	W=38	yes	yes	x	x
	D=41	W=43	yes	yes	x	x

Seat support	Seat depth in cm	Seat width in cm	fender long RH	fender long LH	fender short RH	fender short LH
	D=41	W=48	yes	yes	x	x
	D=41	W=53	yes	yes	x	x
	D=38	W=38	yes	yes	x	x
	D=38	W=43	yes	yes	x	x
	D=38	W=48	yes	yes	x	x
	D=38	W=53	yes	yes	x	x
Medium	D=48	W=38	yes	yes	x	x
	D=48	W=43	yes	yes	x	x
	D=48	W=48	yes	yes	x	x
	D=48	W=53	x	x	yes	yes
	D=46	W=38	yes	yes	x	x
	D=46	W=43	yes	yes	x	x
	D=46	W=48	yes	yes	x	x
	D=46	W=53	x	x	yes	yes
	D=43	W=38	yes	yes	x	x
	D=43	W=43	yes	yes	x	x
	D=43	W=48	yes	yes	x	x
	D=43	W=53	x	x	yes	yes
Long	D=53	W=38	yes	yes	x	x
	D=53	W=43	yes	yes	x	x
	D=53	W=48	x	x	yes	yes
	D=53	W=53	x	x	yes	yes
	D=51	W=38	yes	yes	x	x
	D=51	W=43	yes	yes	x	x
	D=51	W=48	x	x	yes	yes
	D=51	W=53	x	x	yes	yes
	D=48	W=38	yes	yes	x	x
	D=48	W=43	yes	yes	x	x
	D=48	W=48	x	x	yes	yes
	D=48	W=53	x	x	yes	yes
Recaro seat			yes	yes	x	x
Optimist seat			x	x	yes	yes

Removing Fender

1. If possible, move seat to uppermost position.
2.

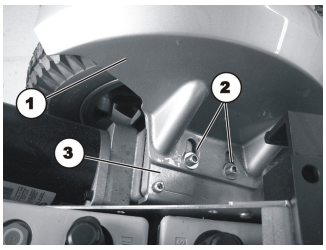

Fig. 6-51

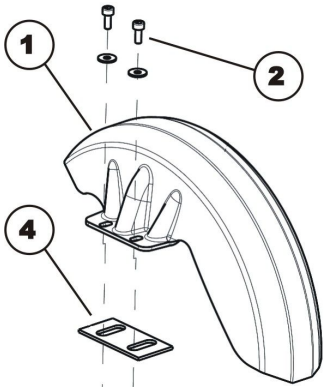

Fig. 6-52

   Loosen and remove two Allen screws (2) and washers.
3. Remove fender (1) from gearbox mounting (3).
4. Storm4 X-plore: Take care of spacers (4).
5. Replace fender according to table above.

Installing Fender

1. Install parts in reverse order.

6.9 Controls

6.9.1 Replacing power module

When replacing power module in connection with remote, take into account final selection of drive program as described in “Drive program selection after component replacement”.

CAUTION!
Any changes to drive program can affect driving characteristics and tipping stability of mobility device.
– Changes to drive program may only be carried out by trained Invacare specialist providers.
– Invacare can only give warranty for safe mobility device driving behavior - especially tipping stability - for unaltered standard drive programs.

All power modules are delivered with standard drive program. If you have made any customer-specific modifications to drive program, they must be adapted after installation of new power module.

- 8 mm socket wrench
- To adapt the drive program: programming software or hand programming device and system installation manual, available from Invacare.

Removing power module

1. Remove rear shroud. See *6.8.1 Replacing Rear Shroud, page 55*.
2. Carefully note location of cable and connection locations of various plugs. Either mark each plug and socket, or take a photograph with digital camera.
3. Pull all plugs out of power module.
4. Loosen two nuts on power module.
5. Remove power module.
6. Replace power module.

Installing power module

1. Install parts in reverse order.
2. Plug all plugs into their old positions.
3. Select drive program. See *6.9.12 Drive program selection after component replacement, page 66*.
4. If new software version is available, update drive program. See *6.9.13 Updating Software, page 66*.
5. Adapt drive program using programming software if necessary.
6. Test all functions.

6.9.2 Replacing LiNX power module bracket

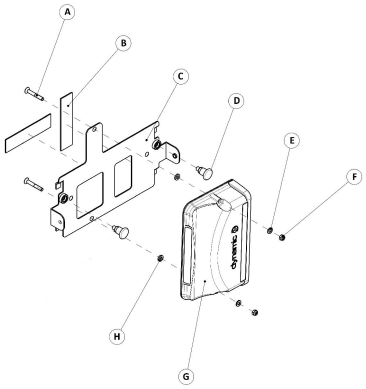

Removing power module

1. Remove rear shroud. See *6.8.1 Replacing Rear Shroud, page 55*.
2. Remove all plugs from power module.
3. Remove pull latch Ⓓ.
4. Loosen and remove lock nut Ⓕ including washer.
5. Remove power module Ⓖ.
6. Remove power module bracket Ⓒ.

Installing power module

1. Install parts in reverse order.

6.9.3 Replacing True Trac Plus power module

When replacing True Track Plus power module in connection with remote, take the final selection of drive program into account as described in “Updating ”.

Different power modules in connection with different remotes can be fitted to mobility device. Various power modules are described in “Power modules”. Replacement is described in following section based on example of a mobility device with an optional lighting PCB and an optional actuator module.

CAUTION!
Any changes to drive program can affect driving characteristics and tipping stability of mobility device.
– Changes to drive program may only be carried out by trained Invacare specialist providers.
– Invacare can only give a warranty for safe mobility device driving behaviour - especially tipping stability - for unaltered standard drive programs.

All power modules are delivered with a standard drive program. If you have made any customer-specific modifications to drive program, these must be adapted after installation of new power module.

- 2,5 mm Allen key
- 3 mm Allen key
- Torque wrench
- To adapt drive program: programming software or hand programming device and system installation manual, available from Invacare®.

Removing True Track Plus power module

1.

Remove rear shroud. See "Removing rear shroud”.
2. Carefully note location of cable and connection locations of various plugs. Either mark each plug and socket, or take a photograph with a digital camera.

3.

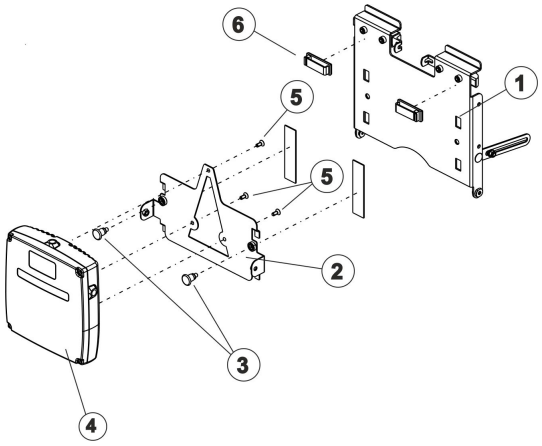

The pictures show True Track Plus power module (1), CDI cable (2) , lighting PCB cable operating hours counter (3) and both bus cables (4).

4. Remove cable from controls mountings (6).
5. Pull snap fasteners (3) next to True Track Plus power module (4) to rear.
6. Lift True Track Plus power module together with mounting (2) and remove mounting from battery flap (1).
7. Loosen and remove three screws (5).
8. Remove True Track Plus power modul.
9. Loosen and remove cable cover caps on motors.
10. Loosen and remove ring terminal ends on motors using 2.5 mm Allen key.
11. Replace True Track Plus power module.

Installing True Track® Plus power module

1. Install parts in reverse order.
2. Plug all plugs into their old positions.
3. Fix cable in controls mountings.
4. Push motor cable terminal ends in from side and fit. Tighten bolts with 2.5 Nm.
5. Select drive program (see “Drive program selection after component replacement”).
6. If new software version is available, update drive program. See ”Updating ”.
7. Adapt drive program using programming software if necessary.
8. Test all functions.

6.9.4 Replacing G-Trac Ssensor

- 5 mm Allen key
- 10 mm socket wrench

Removing G-Trac Sensor

1. If possible, completely raise the seat with the lifter.
2. Turn off mobility device.
3. Remove rear shroud. See *6.8.1 Replacing Rear Shroud, page 55*.
4. Take note of the positions of all cables and the sockets that they are connected to. Mark the connectors and sockets or take a photograph with a digital camera.
5.

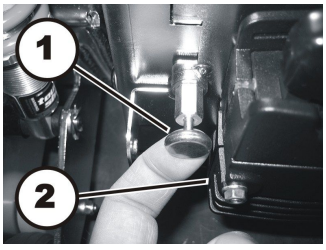

Fig. 6-53

6. Pull locking pin (1) backwards.
7. Lift power module up, together with bracket.
8. Remove bracket from battery box shroud.
9. Place power module, together with bracket, on top of battery box or actuator module, if installed.

10.

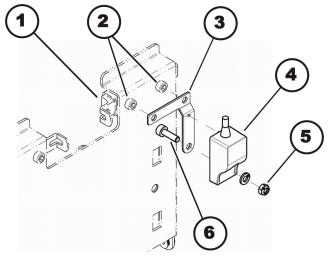

Fig. 6-54

Press both catches (3) inwards and open battery box shroud.

11. Loosen and remove both screws (2).
12. Remove safety catch (1) and G-Trac bracket (3).
13. Loosen and remove self-locking nut (5).
14. Remove G-Trac sensor.
15. Disconnect cable of G-Trac sensor from power module.
16. Replace G-Trac sensor.

Installing G-Trac Sensor

1. Install parts in reverse order.
2. Connect all cable connectors to their former positions.
3. The G-Trac sensor must be installed with the cable pointing upwards. The module has a guide that must fit exactly into the G-Trac sensor holder.
4. Test all functions.

6.9.5 Replacing Gyro plate

- 10 mm wrench

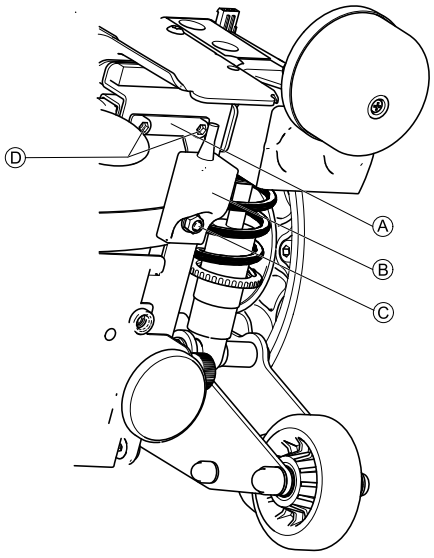

Removing Gyro plate

1. Remove rear shroud. See *6.8.1 Replacing Rear Shroud, page 55*.
2. Loosen and remove locking nut Ⓒ including washer.
3. Loosen and remove screws Ⓓ.
4. Remove Gyro Ⓑ and Gyro plate Ⓐ.
5. Replace Gyro plate.

Installing Gyro plate

1. Install parts in reverse order.

6.9.6 Replacing actuator module under seat

The actuator module is optional.

Tools:
- 4 mm Allen key

Dismantling tilt module

1. If possible, use lifter to move seat to uppermost position.
2. 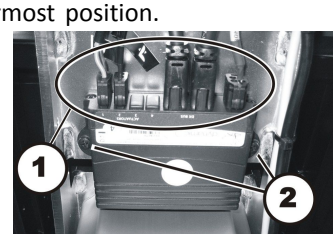

   Carefully note the location of the cable and the connection locations of the various plugs. Either mark each plug and socket, or take a photograph with a digital camera.
3. Pull plug (1) out of actuator module.
4. Remove the two Allen screws (2).
5. Replace actuator module.

Refitting tilt module

1. Refit parts in reverse order.
2. Plug all plugs into their old positions.
3. Check all mobility device functions.

6.9.7 Replacing Light Board

Replacement is described in the following section based on the example of a mobility device with an optional light board and an optional actuator module.

- 4 mm Allen key
- 8 mm socket wrench

Removing Light Board

1. If possible, use lifter to move seat to uppermost position.
2. Remove rear and centre shroud. See *6.8.1 Replacing Rear Shroud, page 55* and *6.8.2 Replacing Centre Shroud, page 55*.
3. Carefully note the location of the cable and the connection locations of the various plugs. Either mark each plug and socket, or take a photograph with a digital camera.
4. Pull plug Ⓐ out of light board.
5. Loosen and remove two screws Ⓒ.
6. Lift off light board together with retaining bracket.
7. Loosen screws Ⓑ and the corresponding nuts on the rear.
8. Replace light board.

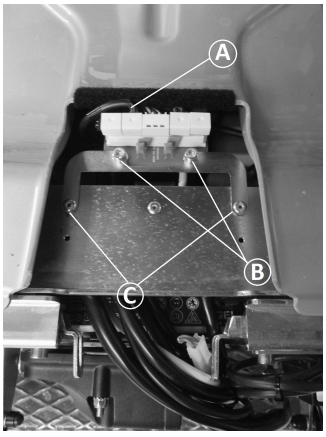

Fig. 6-55

Installing Light Board

1. Install parts in reverse order.
2. Plug all plugs into their old positions.
3. Check all mobility device functions.

6.9.8 Replacing Lighting/Actuator Module CLAM

- Phillips screwdriver size 2
- 3 mm Allen key
- 4 mm Allen key
- 8 mm socket wrench

Removing CLAM

1. If possible, use lifter to move seat to uppermost position.
2. 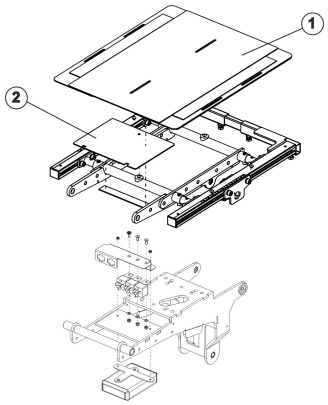

   Turn off mobility device.
3. Remove seat plate or sling seat (1). See *6.12 Seating, page 87*.
4. Remove cover (2).
5. Pull all plugs out of lighting/actuator module CLAM.
6. 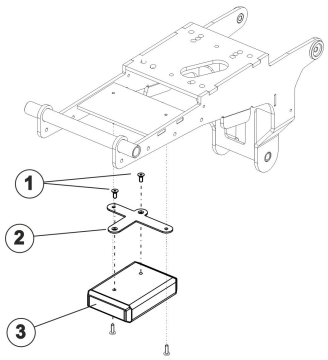

   Loosen and remove relay. See *Replacing relay* in *6.6.5 Replacing and Calibrating True Track Plus Motor, page 29*.
7. Loosen screws (1) with 3 mm Allen key and remove screws including CLAM mounting (2).
8. Replace lighting/actuator module CLAM (3).

When disassembling, take care of small parts such as screws and washers. Put all small parts down so that they can be reassembled in the right sequence.

Installing CLAM

1. Refit parts in reverse order.
2. Plug all the plugs into their old positions.
3. Check all mobility device functions.

6.9.9 Replacing solid angle sensor bracket

- Philips screwdriver

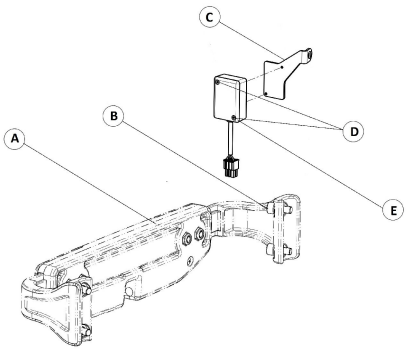

Removing solid angle sensor bracket

1. Loosen and remove screw Ⓑ on stabilization bracket Ⓐ.
2. Pull out solid angle sensor bracket Ⓒ from under stabilization bracket.
3. Loosen and remove screws Ⓓ.

4. Take off solid angle sensor box Ⓔ from solid angle sensor bracket.
5. Replace solid angle sensor bracket.

Installing solid angle sensor bracket

1. Install parts in reverse order.

6.9.10 Replacing USB charger

- 4 mm Allen wrench

When charger overheats, it stops working. Rail under the seat serves to dissipate heat.
- Always mount USB charger in first third of the rail of telescopic seat frame.

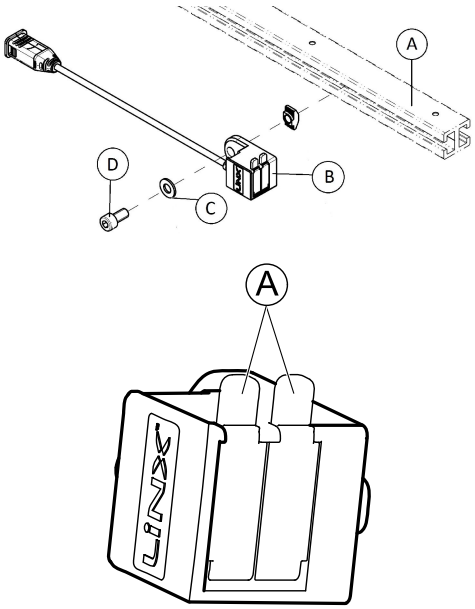

Removing USB charger

1. Loosen and remove screw Ⓓ including washer Ⓒ.
2. Take off USB charger Ⓑ from rail of telescopic seat frame Ⓐ.
3. Replace USB charger.

Installing USB charger

1. Install parts in reverse order.

6.9.11 Replacing 4–way bus socket

- Philips screwdriver

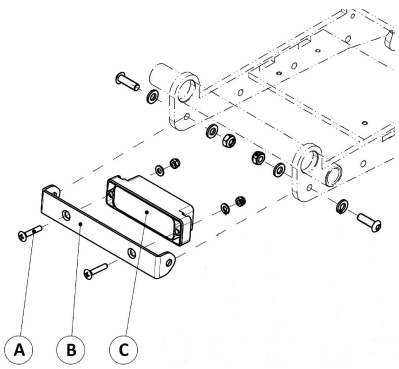

Removing 4–way bus socket

1. Remove all cables from 4–way-bus socket.
2. Loosen and remove screws Ⓐ.
3. Take out 4–way bus socket Ⓑ and replace.

Installing 4–way bus socket

1. Install parts in reverse order.

6.9.12 Drive program selection after component replacement

The drive program is saved in the remote and in the power module. If one of these two components is replaced, the system must be told which of the components has not been replaced so that it knows which contains the current controller profile.

The system allows normal usage of the mobility aid after component replacement only if the profile is selected afterwards.

Profile selection with remote REM A or REM B

1. Insert the plug into the remote or into the power module respectively.
2. Switch the remote on.
3. LEDs (1) and (4) blink.
4. Use the bottom rocker switch (5) to select where the required controller profile is saved.
   LED 1 = power module
   LED 4 = remote
   Only LED (1) or (4) blinks now depending on the selection.
5. Press the "Horn“ (2) and "+“ (3) buttons on the speed selection and hold them down for 3 seconds to confirm the selection. The system will switch itself off and restart automatically.
   In the process, the selected profile is saved in the remote and in the power module.

Profile selection with remote REM 550

1. Insert the plug into the remote or into the power module respectively.
2. Switch the remote on. The display (2) shows that you need to select a profile.
3. Use the bottom rocker switch (3) to select where the required controller profile is saved.
   I = remote II = power module
   The display shows which profile you have selected.
4. Press the "Horn“ (4) and "+“ (1) buttons on the speed selection and hold them down for 3 seconds to confirm the selection. The system will switch itself off and restart automatically. In the process, the selected profile is saved in the remote and in the power module.

6.9.13 Updating Software

The drive programs for mobility devices are continually being further developed and improved by Invacare. For this reason, you should always check whether the drive program version number is up-to-date when carrying out any repairs or regular maintenance.

If a newer version is available, the drive program should be updated. The procedure for updating the drive program are described either in the Wizard software user manual or the LiNX service manual.

WARNING!
Any changes to drive program can affect driving characteristics and tipping stability of mobility device.
– Changes to drive program may only be carried out by trained providers.
– Invacare can only give a warranty for safe mobility device driving behaviour — especially tipping stability — for unaltered standard drive programs.

ACS2, Shark, R-Net, and VR2 Electronics

The power wheelchair is supplied with a standard drive program. If the drive program has been customised, you have to perform this customisation again, after installing the new drive program. This also applies to the customer-specific options of the seat setting for ACS2 remotes, which are activated ex works.

When a powered adjustment option is retrofitted, such as powered legrests, then this option needs to be activated in the driving program as well if you have an ACS2 remote. For more information, refer to the user manual of the Wizard software and the installation instructions for the electronic modules.

- Dynamic® Wizard software
- Wizard software user manual
- Further requirements, such as a minimum system configuration for the PC used for programming, required programming cables etc., can be taken from the Wizard software user manual.

LiNX Electronics

Programming parameters and further information about updating can be taken from the LiNX service manual, available from Invacare.

6.9.14 Main Fuse

CAUTION!
Risk of fire
A short circuit can cause extremely high currents which can result in spark formation and fire.
– Always use an original strip fuse with the approved amperage.
– If the main fuse has blown, first rectify the cause before fitting new one.

CAUTION!
Risk of fire and burns
Fitting incorrect strip fuse causes fire hazard.
– Only fix strip fuses in sequence shown in image below.
– Tighten nuts with 3.3 or 3.5 Nm.

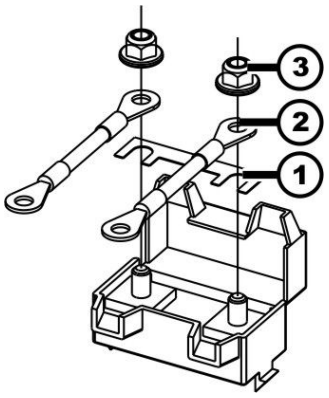

Fig. 6-56 Correct sequence of fitting original strip fuse

1	Strip fuse
2	Ring terminal
3	DIN 6923 nut

- 8 mm socket wrench
- Strip fuse
- Flat screwdriver
- Torque wench 0–20 Nm (or similar)

If the fuseholder is damaged, you can replace it completely with the battery cables.

Removing Main Fuse

1. Turn off mobility device.
2. Remove battery shroud, disconnect battery plugs and pull batteries out of battery box. See *6.10.3 Making Batteries Accessible, page 75*.
3. Fuse holder (1) is located on top of batteries.

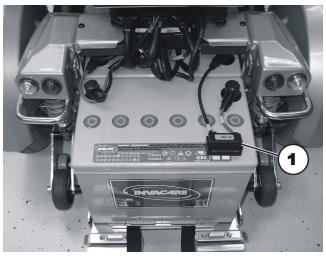

Fig. 6-57

4. Pry open snap hook Ⓑ with flat screwdriver Ⓒ. Fuse holder shroud Ⓐ is open.

   Older fuse holder versions may be locked with tie wrap. If so, cut open tie wrap to access fuse strip.

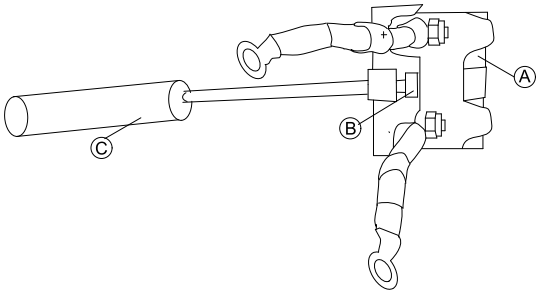

Fig. 6-58

5. You see strip fuse (2) once fuse holder (1) is open.
6. If strip fuse has blown, you must first ascertain and rectify the cause of the fault.
7. Main fuse may only be replaced once fault has been rectified.
8. Remove strip fuse nuts (3).

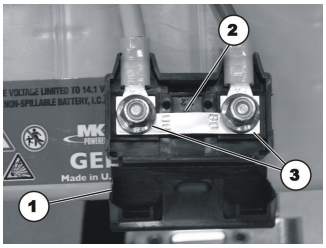

Fig. 6-59

9. Remove strip fuse.

Installing Main Fuse

1. Replace strip fuse.
2. Install parts in reverse order.

   Make sure to press two parts of fuse holder shroud together until it snaps.

   If older fuse holder version is used, lock fuse holder with UL94V0 tie wrap.

3. Test all functions.

6.9.15 Cables

Checking Cables

- 4 mm Allen key
- Oblique pliers
- Tie wraps

1. Remove rear and centre shroud. See *6.8.1 Replacing Rear Shroud, page 55* and *6.8.2 Replacing Centre Shroud, page 55*).
2. Pull batteries out of battery box. See *6.10.3 Making Batteries Accessible, page 75*.
3. Check fuse cable (1) and battery cable (2) for visible damage and crushing points.
4. Replace any damaged cables.

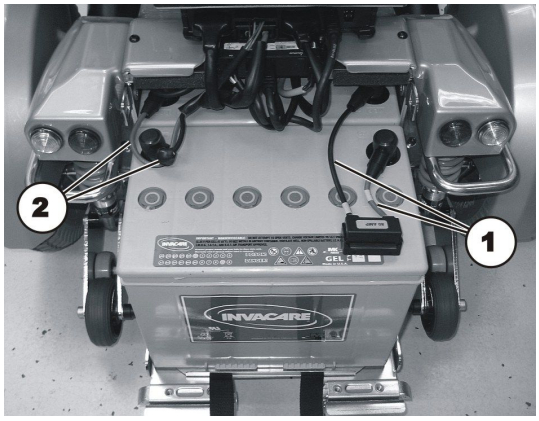

Fig. 6-60

5. Check all other cables for visible damage and crushing points. Replace any damaged cables.
6. Pull each plug coming out of power module carefully. The plug should not come out of socket.
7. If one of plugs is loose, press it back into socket with light pressure. Plug must engage.
8. Make sure that plug is now firmly in socket. If not, repeat previous operation.
9. Refit parts in reverse order.
10. Test all functions.

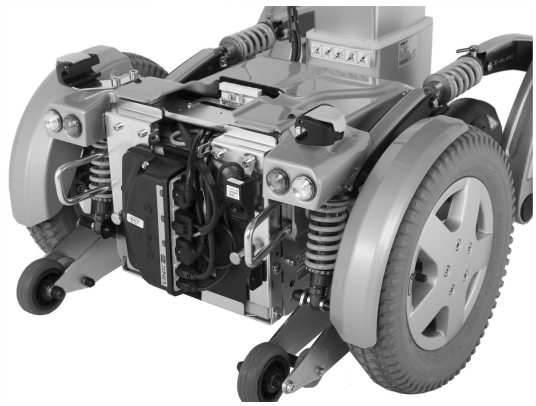

Fig. 6-61

Installing Lifter Column Cables

If a type B lifter column is installed, see *Installing on Lifter Column Type B, page 70*.

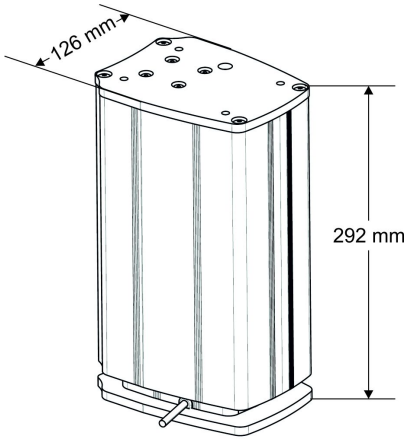

Fig. 6-62 Lifter Column Type A

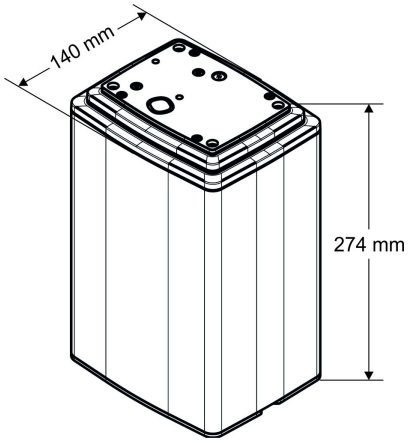

Fig. 6-63 Lifter column type B

- 4 mm Allen key
- Oblique pliers
- Tie wraps

1. Remove rear and centre shroud. See *6.8.1 Replacing Rear Shroud, page 55* and *6.8.2 Replacing Centre Shroud, page 55*.
2. In case of lifter cabling, also remove front shroud. See *6.8.3 Replacing Front Shroud, page 55*.
3. Lead cables on power module and actuator module fitted at rear through recess in battery flap under actuator module to cable bridge (1).

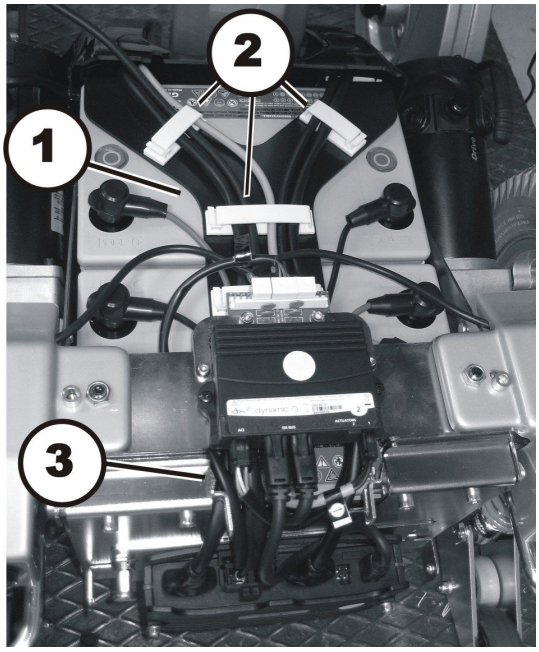

Fig. 6-64

4. Lead cables inside shrouds over cable bridge (1).
5. Fasten cables with cable clamps (2). Cable clamps on front side of battery box for lifter cables (optional) are not seen in picture.
6. Motor cables fitted with protection shrouds (2) are guided out of front shroud through recesses on side.
7. Cables that lead to seat (upper actuator module, remote, headlight) are guided out of front shroud through an upper left recess (3).
8. Make sure cable has enough play so that all movable parts can move freely without stretching, clamping or abrading cable.
9. Lay cables in same way under seat and to remote. Fasten cables with prescribed cable clamps or tie wraps respectively.

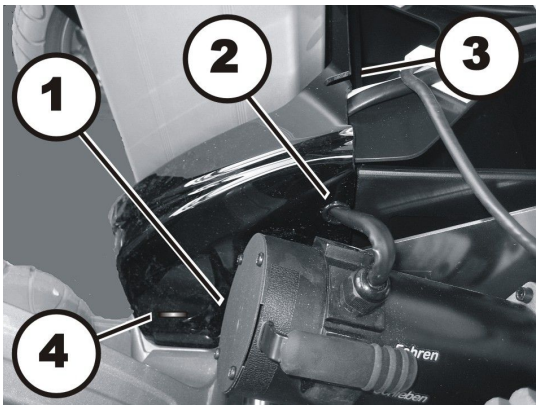

Fig. 6-65

Installing on Lifter Column Type B

If a type B lifter column is already installed, see *Installing on Lifter Column Type B - Part 2 , page 74*.

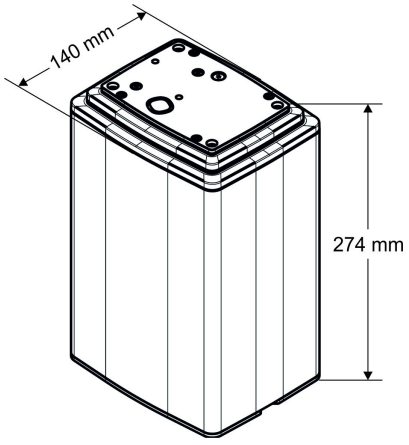

Fig. 6-66 Lifter column type B

Installing on Lifter Column Type B - Part 1

- 4 mm Allen wrench
- Side cutting pliers
- Tie wraps

The cables leading from battery box to seat must be installed so they do not get crimped, stretched or sheared when raising or lowering seat.

1. Run cables from actuator (2) of seat tilt to cable holder (1).
2. Secure cables with tie wrap.
3. Run cables further to lateral bar.

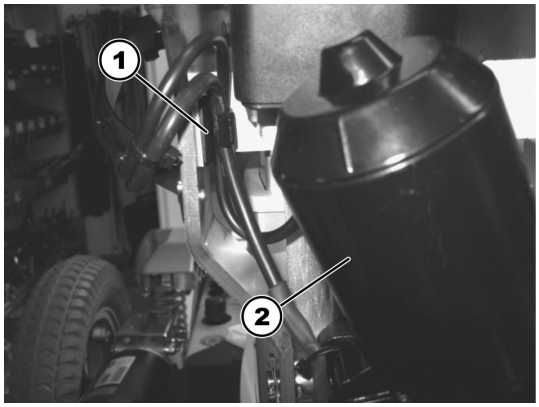

Fig. 6-67

Fig. 6-68

4. Secure cables with tie wraps (1) under outer side of bar (2).

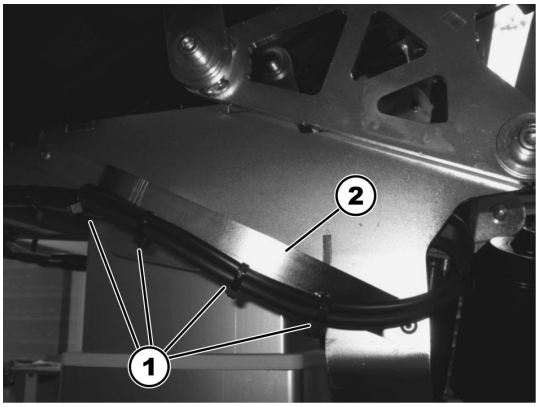

Fig. 6-69

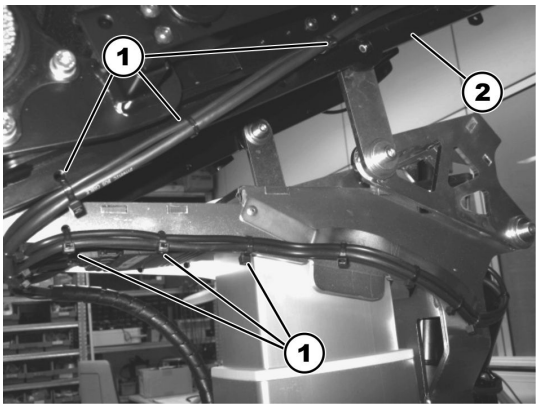

Fig. 6-70

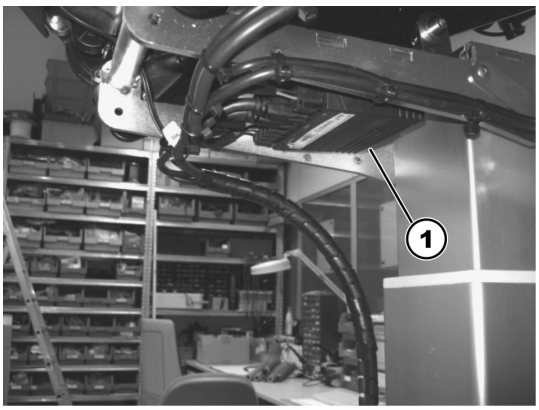

Fig. 6-71 View of seat from below with ACT (1)

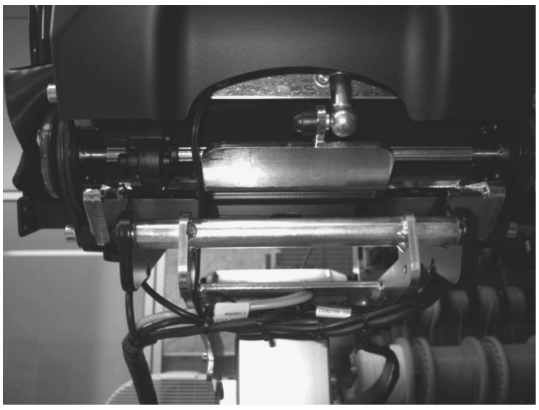

Fig. 6-72 View from rear

5. Attach cable guide for lifter (1) using two screws on left underneath seat.

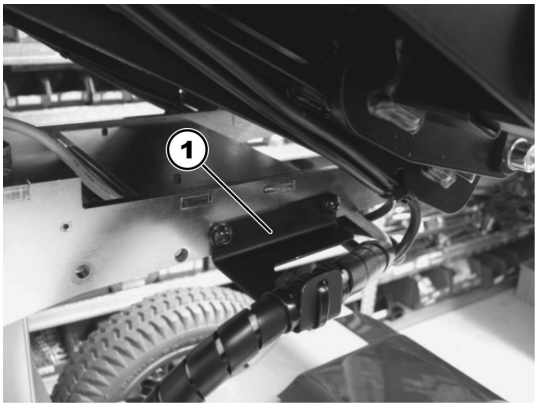

Fig. 6-73

6. Position protective tube for cables completely from outer side.

Fig. 6-74

7. Secure protective tube with a tie wrap (1) on cable guide.
8. Proceed with *Installing on Lifter Column Type B - Part 2 , page 74*.

Fig. 6-75

Installing on Lifter Column Type B - Part 2

1. Run cable bundle, including protective tube for cables, through opening in front shroud (2).
2. Secure cable bundle with tie wrap under shroud.

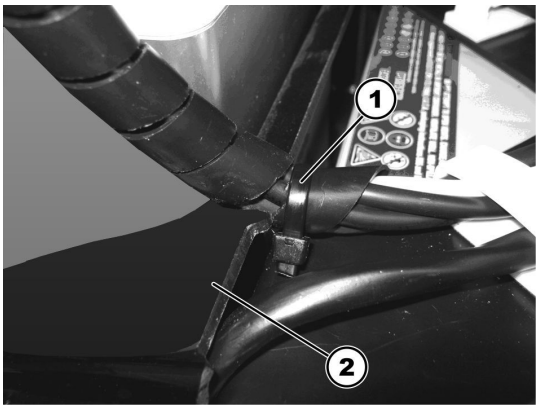

Fig. 6-76

3. Raise and lower seat several times while closely watching cable bundle. The cable bundle must not get trapped, stretched or crushed. The cable bundle must move sideways, as shown in the following illustrations. The drive motor must not be touched by cable bundle.

   Pay attention to areas where cable bundle might get crushed or touch motor.

Fig. 6-77 Lifter column completely extended

Fig. 6-78 Lifter column completely retracted

6.10 Batteries

CAUTION!
Injury hazard and possible material damages if batteries are handled improperly
The installation of new batteries may only be carried out by authorised specialists.
– Observe the warning information on the batteries.
– Only use battery versions stated in the specifications.

CAUTION!
Fire and burns hazard if battery terminal is bypassed
– Take great care to ensure that the battery terminals are never short-circuited with tools or mechanical mobility device parts.
– Ensure that the battery terminal caps have been replaced if you are not working on the battery terminals.

CAUTION!
Risk of crushing
Batteries can be extremely heavy. This results in injury hazards to your hands.
– Handle the batteries with care.
– Ensure that batteries do not fall to the ground when removed from chassis.
– Pay attention to hands.
– Use proper lifting techniques.

WARNING!
Burn hazard
Injury hazard due to discharged acid.
– Always wear acid-proof protective gloves when handling batteries.
– Always wear protective goggles when handling batteries.

What to do if acid is discharged
– Always take clothing which has been soiled by or dipped in acid off immediately!
– Rinse any areas of your skin which has come into contact with battery acid off immediately with plenty of water!

If contact with eyes is made
– You should also consult an eye specialist immediately afterwards!

When removing, take care of small parts such as screws and washers. Put all small parts down so that they can be installed in correct sequence.

6.10.1 General Instructions on Handling Batteries

- Never mix and match different battery manufactures or technologies, or use batteries that do not have similar date codes.
- Never mix gel with AGM batteries.
- The batteries reach their end of life when the drive range is significantly smaller than usual. Contact your provider or service technician for details.
- Always have your batteries installed by a properly trained mobility device technician or a person with adequate knowledge. They have the necessary training and tools to do the job safely and correctly.

6.10.2 Handling Damaged Batteries Correctly

CAUTION!
Corrosion and burns from acid leakage if batteries are damaged
– Remove clothes that have been soiled by acid immediately.

After contact with skin:
– Immediately wash affected area with lots of water.

After contact with eyes:
– Immediately rinse eyes under running water for several minutes; consult a physician.

- Always wear safety goggles and appropriate safety clothing when handling damaged batteries.
- Place damaged batteries in an acid-resistant receptacle immediately after removing them.
- Only ever transport damaged batteries in an appropriate acid-resistant receptacle.
- Wash all objects that have come into contact with acid with lots of water.

Disposing of Dead or Damaged Batteries Correctly

Dead or damaged batteries can be given back to your provider or directly to Invacare.

6.10.3 Making Batteries Accessible

Various power modules can be installed to the mobility device. Instructions below show Storm^4 and ACS 2 power module as example. The course of action is the same for other mobility devices.

1. Remove rear shroud. See *6.8.1 Replacing Rear Shroud, page 55*.
2. Pull locking pin(s) (1).
3. Raise power module together with mounting and remove mounting from battery box shroud.

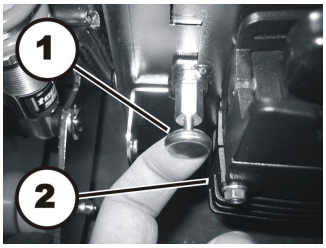

Fig. 6-79

4. Place power module, together with bracket, on top of battery box or actuator module, if installed.
5. Press both catches (3) inwards and open battery box shroud.

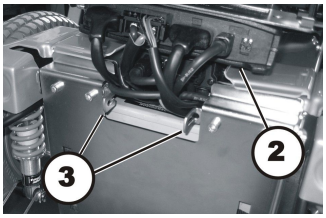

Fig. 6-80

6. Pull on strap (3) to move batteries (1) and battery support (2) forward.

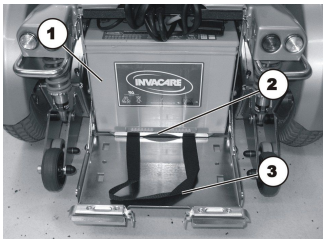

Fig. 6-81

6.10.4 Removing Batteries

- 11 mm socket wrench

Removing Batteries

1. Make batteries accessible. See *6.10.3 Making Batteries Accessible, page 75*.
2. Remove pole caps Ⓐ on battery Ⓒ.
3. Remove pole screws under pole caps.
4. Remove connecting cable Ⓓ and fuse cable Ⓑ.
5. Lift battery from battery tray.
6. Pull on strap of second battery to move it forward.
7. Dismantle cables on second battery as well.
8. Lift second battery from battery tray.

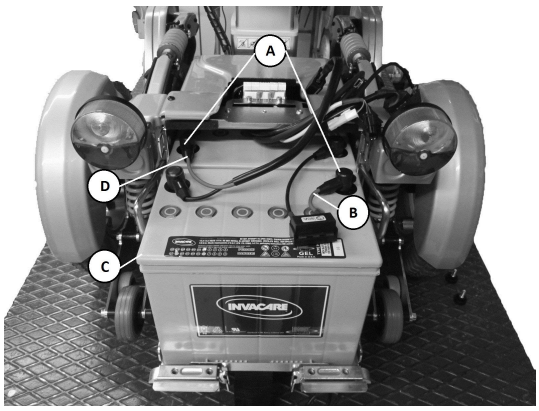

Fig. 6-82

Installing Batteries

1. Refit batteries in reverse order.
2. Make sure battery cage sockets/plugs have been correctly refitted. A polarity diagram is located in rear shroud.

6.11 Lighting Unit

6.11.1 Replacing Front Bulb

- Size 2 Phillips screwdriver

1. Loosen and remove screw (1) on rear of headlight.
2. Remove glass.
3. Replace defective bulb.
4. Refit glass and tighten screw (1).

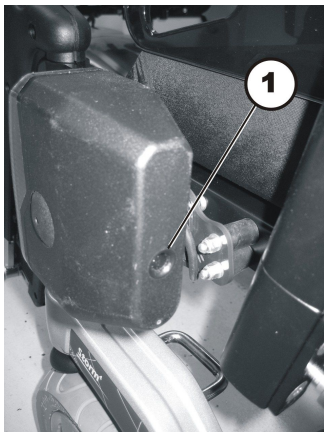

Fig. 6-83

It is not intended for an individual LED to be replaced. Replace the entire lighting unit as described in *6.11.4 Replacing Headlight (LED), page 79* or *6.11.8 Replacing Headlight Holder (LED), page 82*.

6.11.2 Replacing Headlight (Conventional)

- Size 2 Phillips screwdriver
- 8 mm wrench
- Oblique pliers
- Tie wraps

Removing Headlight

1. Remove rear and center shroud. See *6.8.1 Replacing Rear Shroud, page 55* and *6.8.2 Replacing Centre Shroud, page 55*.
2. Take exact note of positions of all cables and sockets that cables are connected to. Mark connectors and sockets or take a photograph.
3. Open cable clamps (1), remove all tie wraps and pull cable out of mobility device.
4. Disconnect cable of affected headlight from light board (2).

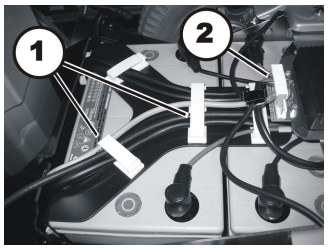

Fig. 6-84

5. Loosen both nuts (1) and remove headlight with holder from rubber mounting.
6. Loosen both screws (2) to remove headlight from holder.
7. Replace headlight.

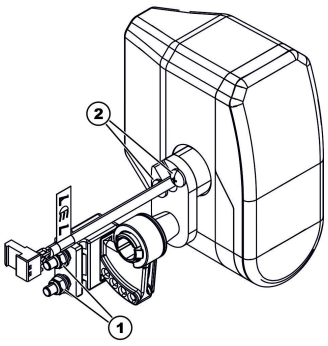

Fig. 6-85

Installing Headlight

1. Install parts in reverse order.
2. Install cables carefully and secure them with cable clamps and tie wraps.
3. Tighten screws finger-tight.
4. Adjust headlight roughly using ratchet plate as a guide. The user can carry out final adjustment following user manual.
5. Test all functions.

6.11.3 Replacing Headlight (Conventional on Modulite)

- Size 2 Phillips screwdriver
- 6 mm Allen key
- Oblique pliers
- Tie wraps

Removing Headlight

1. Remove rear and center shroud. See *6.8.2 Replacing Centre Shroud, page 55* and *6.8.1 Replacing Rear Shroud, page 55*.
2. Take exact note of positions of all cables and sockets that cables are connected to. Mark connectors and sockets or take a photograph.
3. Open cable clamps (1), remove all tie wraps and pull cable out of mobility device.
4. Disconnect cable of affected headlight from light board (2).

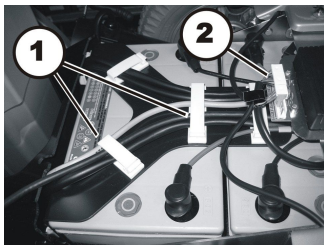

Fig. 6-86

5. Loosen screw Ⓐ, remove washer Ⓑ and headlight with holder.
6. Take care of slot nut Ⓒ inside rail.

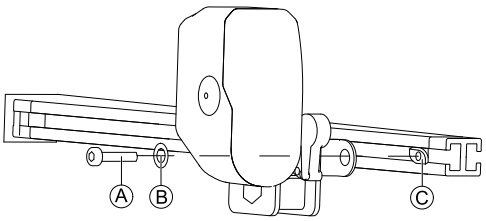

Fig. 6-87

7. Loosen both screws Ⓓ to remove headlight from holder Ⓔ.
8. Replace headlight.

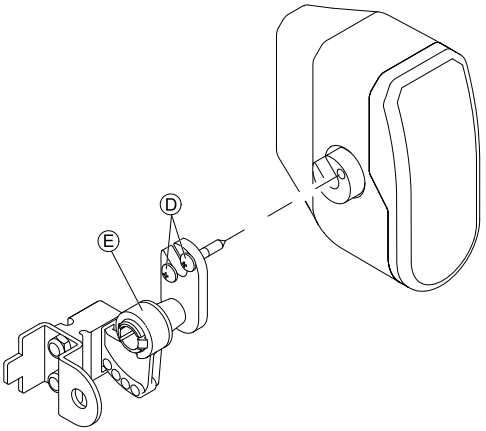

Fig. 6-88

Installing Headlight

1. Install parts in reverse order.
2. Install cables carefully and secure them with cable clamps and tie wraps.
3. Tighten screws finger-tight.
4. Adjust headlight roughly using ratchet plate as a guide. The user can carry out final adjustment following user manual.
5. Test all functions.

6.11.4 Replacing Headlight (LED)

- 4 mm Allen key
- Oblique pliers
- Tie wraps

Removing Headlight

1. Remove rear and centre shrouds. See *6.8.1 Replacing Rear Shroud, page 55* and *6.8.2 Replacing Centre Shroud, page 55*.
2. Take exact note of positions of all cables and sockets that cables are connected to. Mark connectors and sockets or take a photograph.
3. Open cable clamps (1), remove all tie wraps and pull cable out of mobility device.
4. Disconnect cable of affected headlight from light board (2).

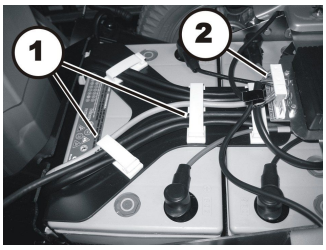

Fig. 6-89

5. Loosen screw (1) and remove headlight from holder.
6. Replace headlight.

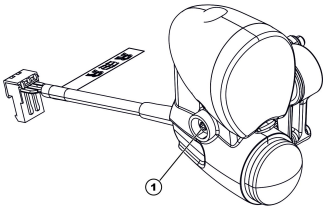

Fig. 6-90

Installing Headlight

1. Install parts in reverse order.
2. Install cables carefully and secure them with cable clamps and tie wraps.
3. Tighten screws finger-tight.
4. Adjust headlight roughly using ratchet plate as a guide. The user can carry out final adjustment following user manual.
5. Test all functions.

6.11.5 Replacing Headlight (LED on Modulite)

- 4 mm Allen key
- Oblique pliers
- Tie wraps

Removing Headlight

1. Remove rear and centre shroud. See *6.8.1 Replacing Rear Shroud, page 55* and *6.8.2 Replacing Centre Shroud, page 55*.
2. Take exact note of positions of all cables and sockets that cables are connected to. Mark connectors and sockets or take a photograph.
3. Open cable clamps (1), remove all tie wraps and pull cable out of mobility device.
4. Disconnect cable of affected headlight from light board (2).

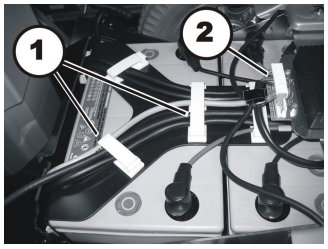

Fig. 6-91

5. Loosen screw Ⓐ to remove washer Ⓑ and headlight from holder.
6. Replace headlight.

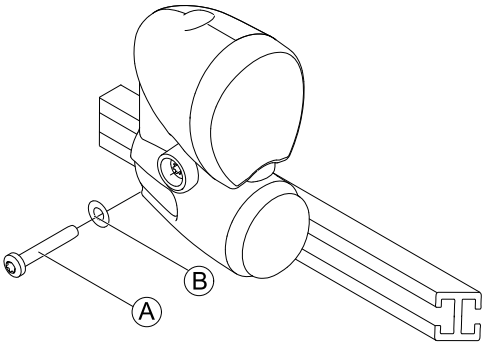

Fig. 6-92

Installing Headlights

1. Install parts in reverse order.
2. Install cables carefully and secure them with cable clamps and tie wraps.
3. Tighten screws finger-tight.
4. Adjust headlight roughly using ratchet plate as a guide. The user can carry out final adjustment following user manual.
5. Test all functions.

6.11.6 Replacing Headlight Holder (Conventional)

- Size 2 Phillips screwdriver
- 8 mm wrench
- Oblique pliers
- Tie wraps

Removing Headlight Holder

1. Remove rear and center shroud. See *6.8.1 Replacing Rear Shroud, page 55* and *6.8.2 Replacing Centre Shroud, page 55*.
2. Take exact note of positions of all cables and sockets that cables are connected to. Mark connectors and sockets or take a photograph.
3. Open cable clamps (1), remove all tie wraps and pull cable out of mobility device.
4. Disconnect cable of affected headlight from light board (2).

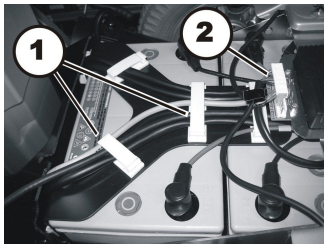

Fig. 6-93

5. Loosen both nuts (1) and remove headlight with holder from rubber mounting.
6. Loosen both screws (2) to remove headlight from holder.
7. Replace holder.

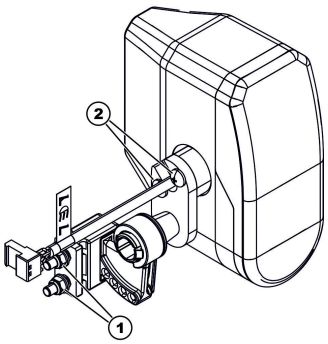

Fig. 6-94

Installing Headlight Holder

1. Install parts in reverse order.
2. Install cables carefully and secure them with cable clamps and tie wraps.
3. Tighten screws finger-tight.
4. Adjust headlight roughly using ratchet plate as a guide. The user can carry out final adjustment following user manual.
5. Test all functions.

6.11.7 Replacing Headlight Holder (Conventional on Modulite)

- Size 2 Phillips screwdriver
- 8 mm wrench
- 6 mm Allen key
- Oblique pliers
- Tie wraps

Removing Headlight Holder

1. Remove rear and center shroud. See *6.8.2 Replacing Centre Shroud, page 55* and *6.8.1 Replacing Rear Shroud, page 55*.
2. Take exact note of positions of all cables and sockets that cables are connected to. Mark connectors and sockets or take a photograph.
3. Open cable clamps (1), remove all tie wraps and pull cable out of mobility device.
4. Disconnect cable of affected headlight from light board (2).

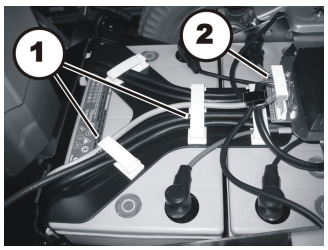

Fig. 6-95

5. Loosen screw Ⓐ to remove washer Ⓑ and headlight with holder.
6. Take care of slot nut Ⓒ inside rail.

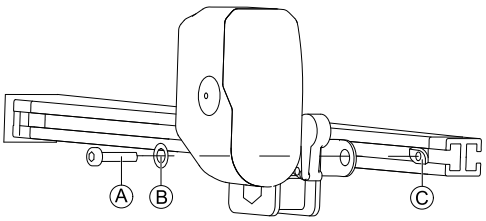

Fig. 6-96

7. Loosen both screws Ⓓ to remove headlight from holder Ⓔ.

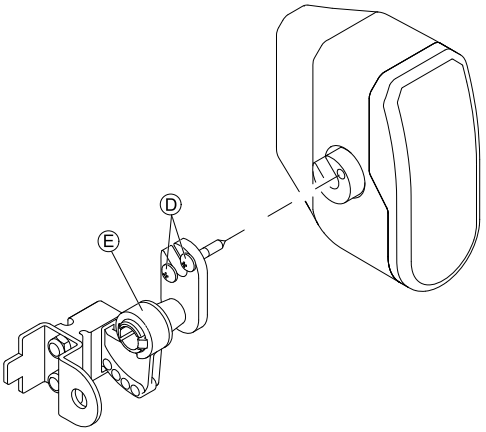

Fig. 6-97

8. Loosen both nuts Ⓗ to remove washers Ⓖ and lamp bracket Ⓕ from holder Ⓔ.
9. Replace holder.

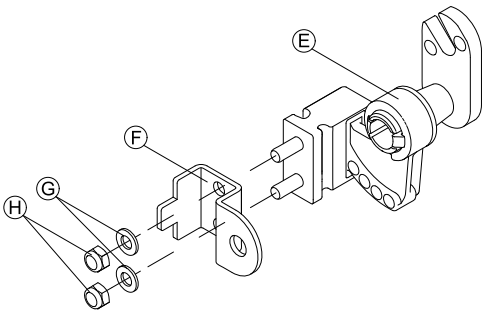

Fig. 6-98

Installing Headlight Holder

1. Install parts in reverse order.
2. Install cables carefully and secure them with cable clamps and tie wraps.
3. Tighten screws finger-tight.
4. Adjust headlight roughly using ratchet plate as a guide. The user can carry out final adjustment following user manual.
5. Test all functions.

6.11.8 Replacing Headlight Holder (LED)

- 4 mm Allen key
- 8 mm wrench
- Oblique pliers
- Tie wraps

Removing Headlight Holder

1. Remove rear and centre shroud. See *6.8.1 Replacing Rear Shroud, page 55* and *6.8.2 Replacing Centre Shroud, page 55*.
2. Take exact note of positions of all cables and sockets that cables are connected to. Mark connectors and sockets or take a photograph.
3. Open cable clamps (1), remove all tie wraps and pull cable out of mobility device.
4. Disconnect cable of affected headlight from light board (2).

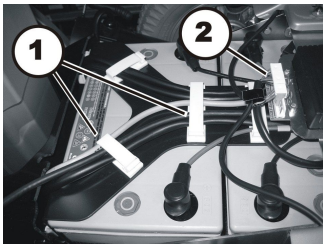

Fig. 6-99

5. Loosen screw (1) and remove headlight from holder.
6. Loosen both nuts (2) and remove holder from rubber mounting.
7. Replace holder.

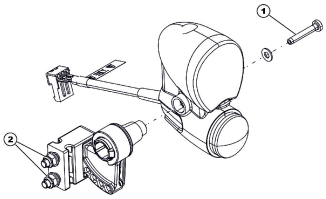

Fig. 6-100

Installing Headlight Holder

1. Install parts in reverse order.
2. Install cables carefully and secure them with cable clamps and tie wraps.
3. Tighten screws finger-tight.
4. Adjust headlight roughly using ratchet plate as a guide. The user can carry out final adjustment following user manual.
5. Test all functions.

6.11.9 Replacing Headlight Holder (LED on Modulite)

- 4 mm Allen wrench
- 8 mm wrench
- 6 mm Allen key
- Oblique pliers
- Tie wraps

Removing Headlight Holder

1. Remove rear and centre shroud. See *6.8.1 Replacing Rear Shroud, page 55* and *6.8.2 Replacing Centre Shroud, page 55*.
2. Take exact note of positions of all cables and sockets that cables are connected to. Mark connectors and sockets or take a photograph.
3. Open cable clamps (1), remove all tie wraps and pull cable out of mobility device.
4. Disconnect cable of affected headlight from light board (2).

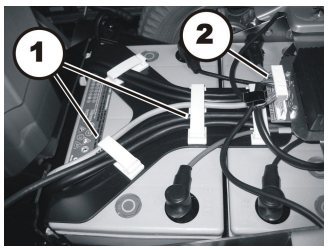

Fig. 6-101

5. Loosen screw Ⓐ to remove washer Ⓑ and headlight with holder.

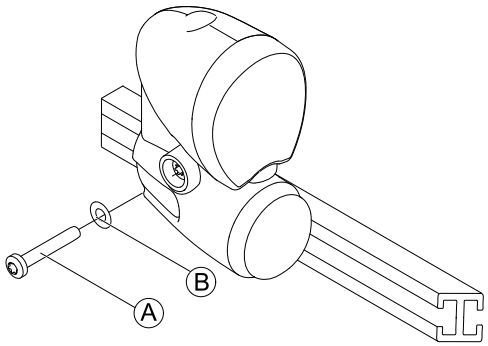

Fig. 6-102

6. Loosen screw Ⓒ to remove washer Ⓓ and holder Ⓔ with lamp bracket Ⓕ.
7. Take care of slot nut Ⓖ inside rail.

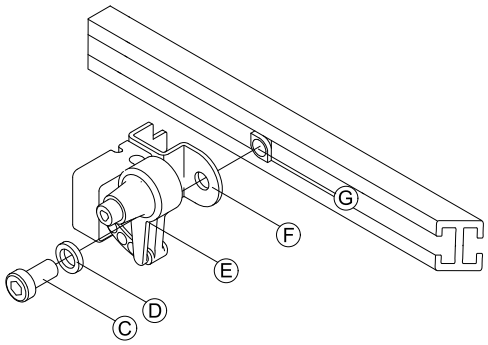

Fig. 6-103

8. Loosen nuts Ⓘ to remove washers Ⓗ and holder Ⓔ from lamp bracket Ⓕ.
9. Replace holder.

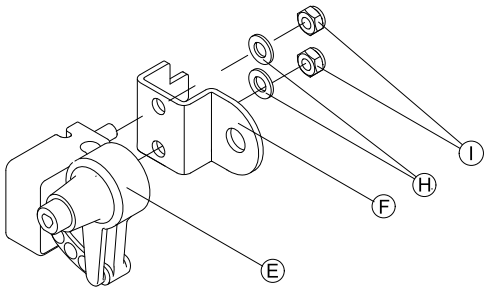

Fig. 6-104

Installing Headlight Holder

1. Install parts in reverse order.
2. Install cables carefully and secure them with cable clamps and tie wraps.
3. Tighten screws finger-tight.
4. Adjust headlight roughly using ratchet plate as a guide. The user can carry out final adjustment following user manual.
5. Test all functions.

6.11.10 Replacing Rear Bulb (Conventional)

- Size 2 Phillips screwdriver

1. Loosen and remove Phillips screw (1).
2. Remove glass.
3. Replace defective bulb.
4. Replace glass and tighten Phillips screw.

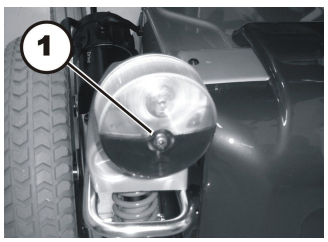

Fig. 6-105

It is not intended for an individual LED to be replaced. Replace the entire lighting unit as described in *6.11.13 Replacing Complete Rear Light (LED), page 86*.

6.11.11 Replacing Rear Light (Conventional)

- 4 mm Allen key
- 8 mm socket wrench
- 13 mm socket wrench
- Oblique pliers
- Tie wraps

Removing Rear Light

1. Remove rear and center shroud. See *6.8.1 Replacing Rear Shroud, page 55* and *6.8.2 Replacing Centre Shroud, page 55*.
2. Take exact note of positions of all cables and sockets that cables are connected to. Mark connectors and sockets or take a photograph.
3. Open cable clamps (1), remove all tie wraps and pull cable out of mobility device.
4. Disconnect cable of affected headlight from light board (2).

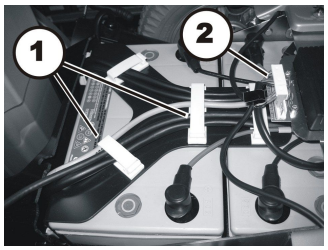

Fig. 6-106

5. Loosen nut (1).
6. Lift off rear light shroud (2) carefully.

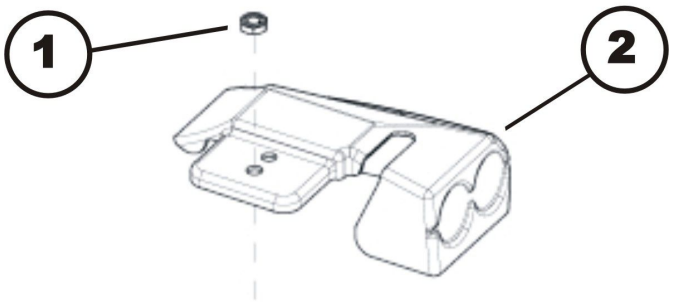

Fig. 6-107

7. Remove two plastic caps (1).
8. Loosen two nuts (2).
9. Remove nut and washers (3).
10. Pull off rear light (6) to the rear and remove protect cap (5) and both bushes (4).

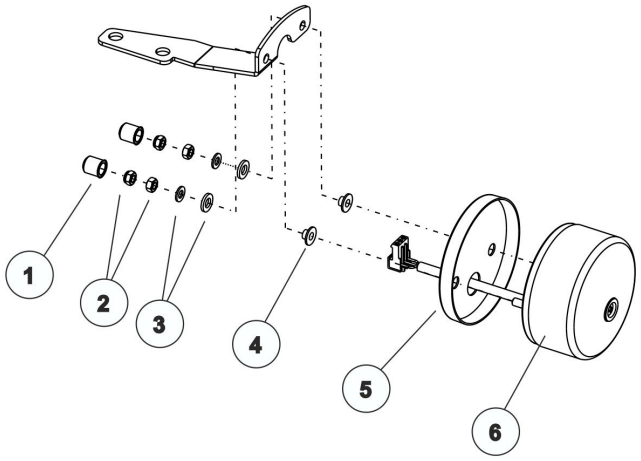

Fig. 6-108

Installing Rear Light

1. Install parts in reverse order.
2. Install cables carefully and secure them with cable clamps and tie wraps.
3. Test all functions.

6.11.12 Replacing Rear Light Holder (Conventional)

- 8 mm socket wrench
- 13 mm socket wrench

Removing Rear Light Holder

1. Remove rear light as described in *6.11.11 Replacing Rear Light (Conventional), page 85*.
2. Loosen and remove both Allen screws (1).
3. Replace rear light holder (2).

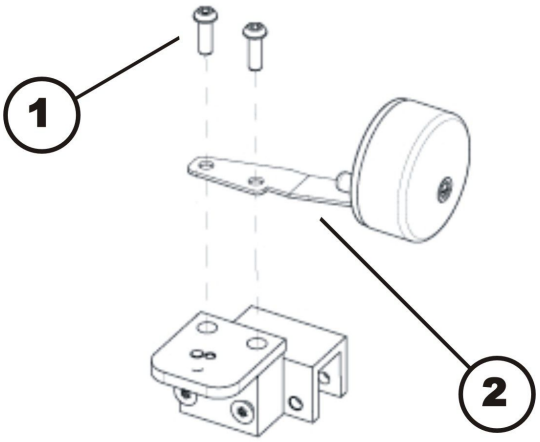

Fig. 6-109

Installing Rear Light Holder

1. Install parts in reverse order.
2. Test all functions.

6.11.13 Replacing Complete Rear Light (LED)

For the LED lighting unit the rear light shroud is the equivalent of a holder. To replace the rear light shroud, see *6.8.5 Replacing Rear Light Shroud, page 56*.

- 4 mm Allen key
- 13 mm socket wrench
- Oblique pliers
- Tie wraps

Removing Rear Light

1. Remove rear and centre shroud. See *6.8.1 Replacing Rear Shroud, page 55* and *6.8.2 Replacing Centre Shroud, page 55*.
2. Take exact note of positions of all cables and sockets that cables are connected to. Mark connectors and sockets or take a photograph.
3. Open cable clamps (1), remove all tie wraps and pull cable out of mobility device.
4. Disconnect cable of affected headlight from light board (2).

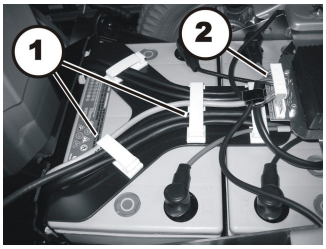

Fig. 6-110

5. Loosen nut (1).
6. Lift off rear light shroud (2) carefully.

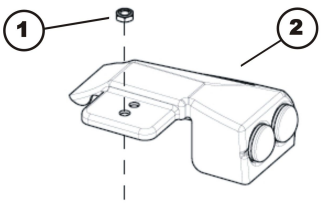

Fig. 6-111

7. Open rear light plug (3) that is to be replaced.
8. The rear lights are only clamped in plastic casing. Replace red rear light (1) or indicator (2) as required. Cables are marked correspondingly.

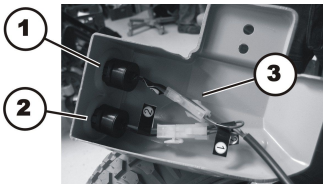

Fig. 6-112

Installing Rear Light

1. Install all parts in reverse order.
2. Install cables carefully and secure them with cable clamps and tie wraps.
3. Test all functions.

6.12 Seating

- This manual refers to configurations with Easy Adapt and Recaro Seat unit only.
- For seat systems, such as Modulite and Ultra Low Maxx, refer to the corresponding seat service manual.

- 4 mm Allen key

Before you get access to the seating components, you need to:

- Remove legrests and armrests.
- Easy Adapt seat only: Remove seat cushion.
- Recaro seat only: Loosen and remove four screws on bottom side of seat. Remove seat.
- Remove any existing tie wraps holding cables on remote or lighting. Remove cables from stuck-on clamps.
- Loosen cap nuts of headlight mountings. See *6.11 Lighting Unit, page 77*.
- Put headlight and mounting in safe place on rear part of battery box.
- Remove all cables between seat and chassis.

6.12.1 Replacing Seat Support Plates

Tools:
- 4 mm Allen key

Easy Adapt Seat

Removing Seat Support Plates

1. Remove cover plates (1).
2. Loosen and remove two Allen screws (7) which are located on side at front of seat support plate.
3. Loosen and remove two Allen screws (8) which are located on side at rear of seat support plate.
4. Loosen and remove two Allen screws (9) at front of seat support plate.
5. Remove seat support plate (2).
6. Insert and tighten Allen screws (9) to seat frame (3) and crossmember (4) so that crossmember cannot fall out of seat frame.
7. Repeat operations on other side of seat.

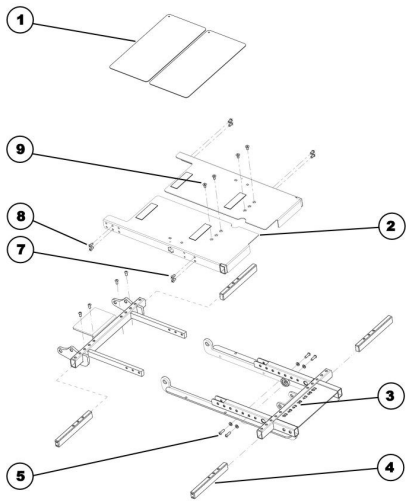

Fig. 6-113 Exploded drawing of seat support

Installing Seat Support Plates

1. Loosen and remove two Allen screws (9) from seat frame (3) and crossmember (4).
2. Replace seat support plate (2).
3. Fit two Allen screws (9) at front of seat support plate and tighten them one after another.
4. Fit two Allen screws (7) which are located at front of seat support plate.
5. Fit two Allen screws (8) which are located at rear of seat support plate.
6. Repeat operations on other side of seat.
7. Refit all parts you have removed.
8. Test all functions.

Recaro Seat

Removing Seat Support Plate

1. Loosen and remove Allen screws Ⓐ.
2. Remove seat support plate Ⓑ.

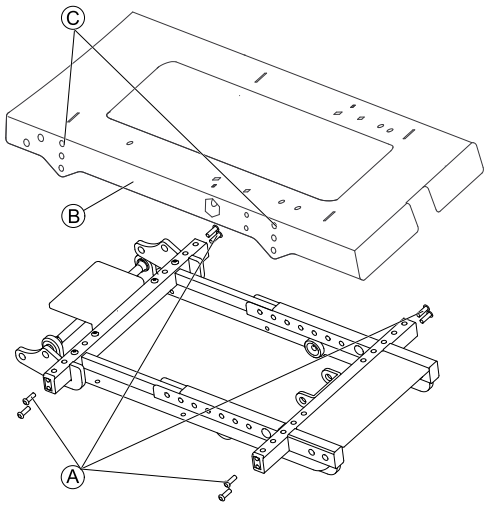

Fig. 6-114

Installing Seat Support Plate

1. Replace seat support plate Ⓑ.
   Use holes Ⓒ to adjust height of seat support plate.
2. Insert and tighten Allen screws Ⓐ.
3. Refit all parts you have removed.
4. Test all functions.

6.12.2 Replacing Tilt Actuator

- Oblique pliers
- Cable ties

Removing Tilt Actuator

1. Remove legrests.
2. Unplug actuator plug out of module.
3. Remove cable ties.
4. Remove cable.
5. Remove upper pin retainer clip Ⓐ.
6. Remove upper pin Ⓑ and tip tilt actuator Ⓔ forward.
7. Remove lower pin retainer clip Ⓓ.
8. Remove lower pin Ⓒ and tilt actuator.
9. Replace tilt actuator.

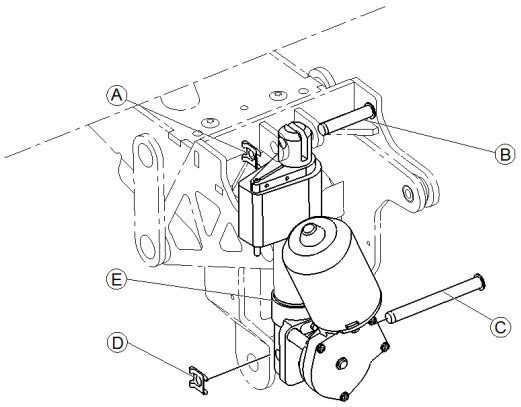

Fig. 6-115

Installing Tilt Actuator

1. Install parts in reverse order.
2. Test all functions.

6.12.3 Replacing Tilt Spindle

- Oblique pliers

Removing Tilt Spindle

1. Remove upper pin retainer clip Ⓐ.
2. Remove upper pin Ⓑ and tip tilt spindle Ⓒ forward.
3. Remove lower pin retainer clip Ⓕ.
4. Remove lower pin Ⓓ and tilt spindle. Take care of spacers Ⓔ.
5. Replace tilt spindle.

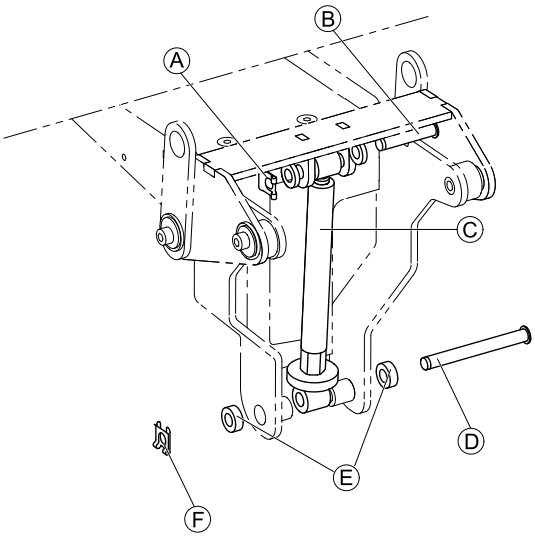

Fig. 6-116

Installing Tilt Spindle

1. Install parts in reverse order.
2. Test all functions.

6.12.4 Replacing Tilt Bracket

CAUTION!
Risk of strains from lifting heavy parts!
– Use proper lifting techniques.

We use different types of tilt carriers in our mobility devices. Due to this fact the carrier on your mobility device may look different to the illustrations below. The following mounting instructions are not affected by this.

- 6 mm Allen key

Removing Tilt Bracket

1. Remove seat frame. See *6.12.5 Replacing Seat Frame, page 90*.
2. Remove tilt spindle or tilt actuator. See *6.12.3 Replacing Tilt Spindle, page 88* (manual tilt) or *6.12.2 Replacing Tilt Actuator, page 88* (powered tilt).
3. Loosen and remove screw Ⓔ, washer Ⓓ and bushing Ⓒ on both sides of seat support Ⓐ.
4. Replace tilt bracket Ⓑ.

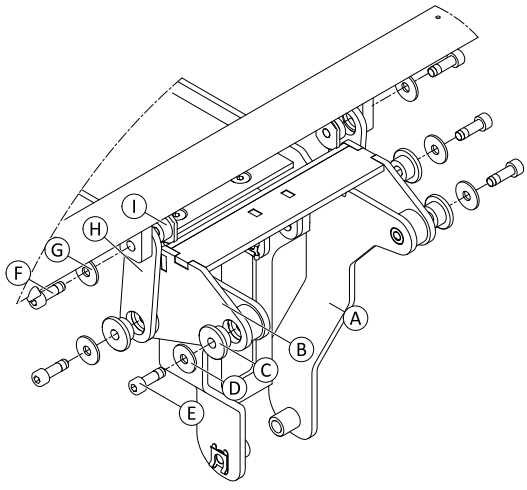

Fig. 6-117 Schematic diagram of a tilt bracket

Installing Tilt Bracket

1. Install parts in reverse order. Ensure that holes of tilt sheet Ⓗ and seat frame are in line.
2. Test all functions.

6.12.5 Replacing Seat Frame

CAUTION!
Risk of strain from lifting heavy parts!
– Use proper lifting techniques.

- 2 x 6 mm Allen key

Removing Seat Frame

1. Loosen screws Ⓐ simultaneously.
2. Remove screw that becomes loose and washer Ⓑ. Screw and washer on other side remain inside connecting rod Ⓓ.
3. Pull out connecting rod.
4. Lift off seat frame Ⓔ.

   Bushings Ⓒ must remain in seat frame.

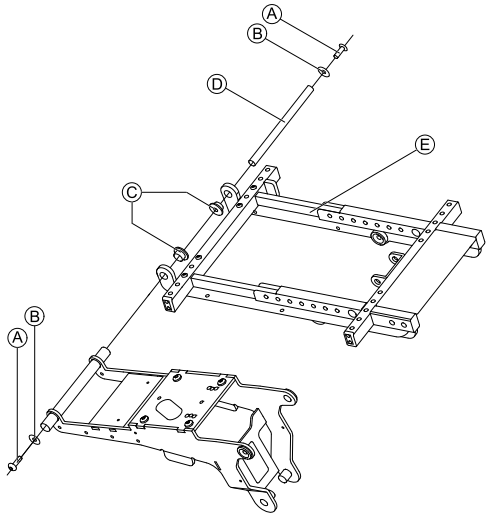

Fig. 6-118

Installing Seat Frame

1. Install parts in reverse order.
2. Test all functions.

6.12.6 Replacing Seat Support

CAUTION!
Risk of strains from lifting heavy parts!
– Use proper lifting techniques.

- TX40 Torx key
- Oblique pliers
- Cable ties

We use different types of seat supports in our mobility devices. Due to this fact the seat support and the screws on your mobility device may look different to the illustrations below. The mounting instructions are not affected by this.

Removing Seat Support

1. Remove seat frame. See *6.12.5 Replacing Seat Frame, page 90*.
2. Loosen and remove four screws Ⓐ.
3. Lift off seat support Ⓑ from seat / lifting column.

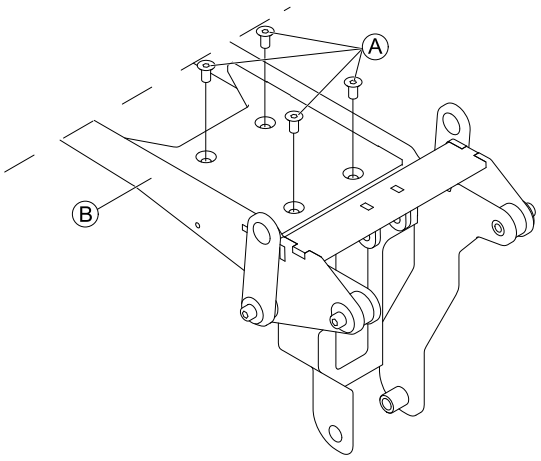

Fig. 6-119

Installing Seat Support

CAUTION!
Damage to lifter column possible. Using incorrect screws or inserting and tightening screws incorrectly will damage lifter column.
The lifter column is supplied with self-tapping screws. The screws are used on underside as well as on upper side.
– Use only screws provided.
– If screws were already screwed in: When reinstalling screws, make sure that they are screwed carefully into existing thread.
– Tighten screws to a torque of 15 – 17 Nm.

1. Install parts in reverse order.
2. Test all functions.

6.12.7 Replacing Planetary Gear

- 4 mm Allen key
- 5 mm Allen key
- 13 mm wrench (2x)
- Size 2 Phillips screwdriver
- Snap ring pliers

Removing Planetary Gear

1. Loosen and remove the four Allen screws on the plastic shroud (1).
2. Remove the plastic shroud.
3. Loosen and remove the Phillips screw (3).
4. Remove reflector (4).
5. Remove snap ring under reflector (not in the picture).
6. Undo two Allen screws (6).
7. Remove Allen screws (6) incl. the washers and cane holder (5) if necessary.
8. When replacing both planetary gears or dismantling the entire back section, also loosen and remove Allen screws (6) incl. washers on the other side of the mobility device.
9. Loosen and remove two Allen screws (2).
10. Remove Allen screws (2) incl. washers and nut, if necessary.
11. Pull planetary gear from axle.
12. Replace planetary gear.

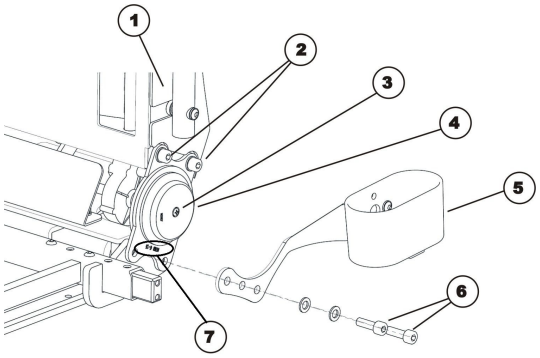

Fig. 6-120

Installing Planetary Gear

Make sure print on crabs (7) “04/7027 42/1.5” is always outside and below.

1. Install parts in reverse order.
2. Test all mobility device functions.

6.13 Seat column/lifter column

6.13.1 Column Types Overview

The following column types can be installed:

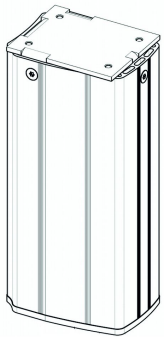

Fig. 6-121 Seat column

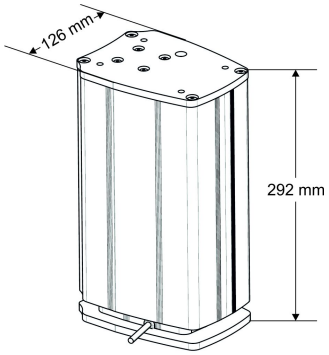

Fig. 6-122 Lifter column type A (electrically adjustable)

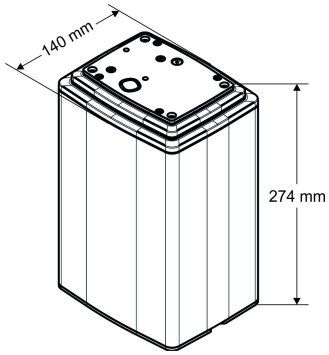

Fig. 6-123 Lifter column type B (electrically adjustable)

6.13.2 Replacing Seat Column

CAUTION!
Risk of strains from lifting heavy parts!
– Use proper lifting techniques.

CAUTION!
Risk of injury caused by uncontrolled movement of mobility device
– Switch off power supply (ON/OFF key).
– Engage drive.
– Position mobility device on it's side and secure position so it does not turn over.

- TX40 Torx key
- Oblique pliers
- Cable ties

Removing Seat Column

1. Remove seat. See *6.12.6 Replacing Seat Support, page 90*.
2. Remove shrouds. See *6.8.1 Replacing Rear Shroud, page 55*, *6.8.2 Replacing Centre Shroud, page 55* and *6.8.3 Replacing Front Shroud, page 55*.
3. Place mobility device on side and safeguard it against overturning. Use proper lifting techniques.
4. Loosen and remove four screws (3) on underside of chassis (2).
5. Remove seat column (1).

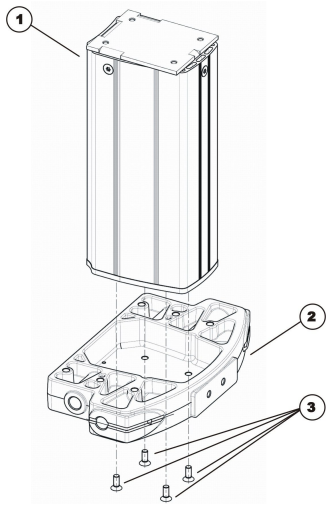

Fig. 6-124

Installing Seat Column

1. Install parts in reverse order.
2. Test all functions.

6.13.3 Replacing Lifter Column Type A

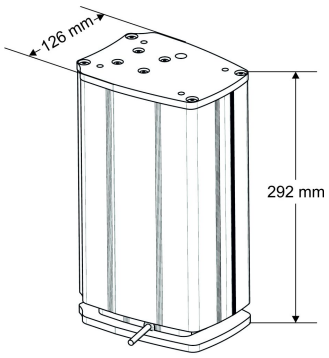

Fig. 6-125 Lifter column type A

WARNING!
Risk of crushing
The seat is very heavy. Risk of injury to hands and feet.
– Use proper lifting techniques.

WARNING!
Risk of crushing
The mobility device is very heavy. Risk of injury to hands and feet.
– Use proper lifting techniques.

- 4 mm Allen key
- TX 40 wrench
- Oblique pliers
- Cable ties

Removing Lifter Column

1. Remove rear battery box shroud. See *6.8.1 Replacing Rear Shroud, page 55*.
2. Remove center battery box shroud. See *6.8.2 Replacing Centre Shroud, page 55*.
3. Remove front battery box shroud. See *6.8.3 Replacing Front Shroud, page 55*.
4. Remove seat. See *6.12 Seating, page 87*.
5. Disconnect cable of lifter column from actuator module on battery box.
6. Open cable clamps and expose cable.
7. Place mobility device on its side and safeguard it against overturning. Use proper lifting techniques.
8. Loosen and remove four screws (3) on underside of chassis (2).
9. Remove lifter column (1).

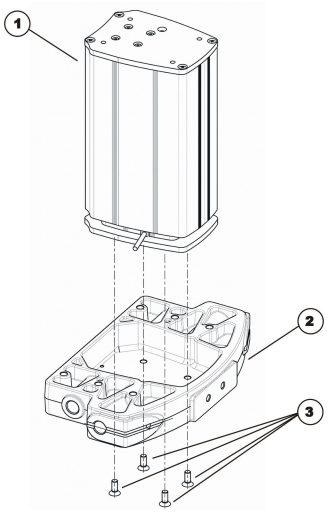

Fig. 6-126

Installing Lifter Column

1. Install parts in reverse order.
2. Test all functions.

6.13.4 Replacing Lifter Column Type B

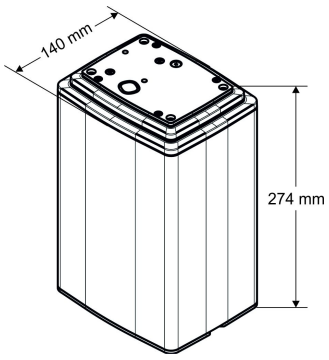

Fig. 6-127 Lifter column type B

WARNING!
Risk of crushing
The seat is very heavy. Injury hazard to hands and feet.
– Use proper lifting techniques.

WARNING!
Risk of crushing
The mobility device is very heavy. Risk of injury to hands and feet.
– Use proper lifting techniques. Risk of injury caused by uncontrolled movement of mobility device.
– Switch off power supply (ON/OFF key).
– Engage drive.
– Position mobility device on it's side and secure position so it does not turn over.

- 4 mm Allen key
- T40 torx wrench
- Oblique pliers
- Cable ties
- Torque wrench 5 – 30 Nm (or similar)

Removing Lifter Column

1. Remove rear battery box shroud. See *6.8.1 Replacing Rear Shroud, page 55*.
2. Remove center battery box shroud. See *6.8.2 Replacing Centre Shroud, page 55*.
3. Open cable clamps on battery box and expose cables.
4. Disconnect cables on actuator module on battery box and, if necessary, on lighting circuit board.
5. Disconnect plug at top of lifter column.
6. Remove seat. See *6.12 Seating, page 87*.
7. Place mobility device on its side and safeguard it against overturning. Use proper lifting techniques.
8. Loosen and remove four screws (3) on underside of chassis (2).
9. Remove lifter column (1).

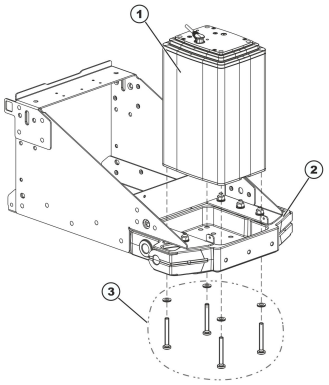

Fig. 6-128

Installing Lifter Column

CAUTION!
Damage to lifter column possible. Using incorrect screws or inserting and tightening screws incorrectly will damage lifter column.
The lifter column is supplied with self-tapping screws. The screws are used on underside as well as on upper side.
– Use only screws provided.
– If screws were already screwed in: When reinstalling screws, make sure that they are screwed carefully into existing thread.
– Tighten screws to a torque of 15-17 Nm.

1. Install parts in reverse order.
2. Install cables. See *6.9.15 Cables, page 68*.
3. Test all functions.

6.14 Backrest

6.14.1 Replacing EasyAdapt Back Unit

Tools:
- 5 mm Allen key
- Oblique pliers
- Cable ties

Removing Back Unit

1. Remove back cushion.
2. Pull actuator cable out of actuator module under seat.
3. Pull cable out of mobility device. Remove any cable ties which are fitted.
4. Loosen and remove Allen screws (5) incl. washers on left and right side of seat.
5. Carefully remove back section (1) together with lower part (2) from seat support (3). Two parts are interconnected via the arm (4).

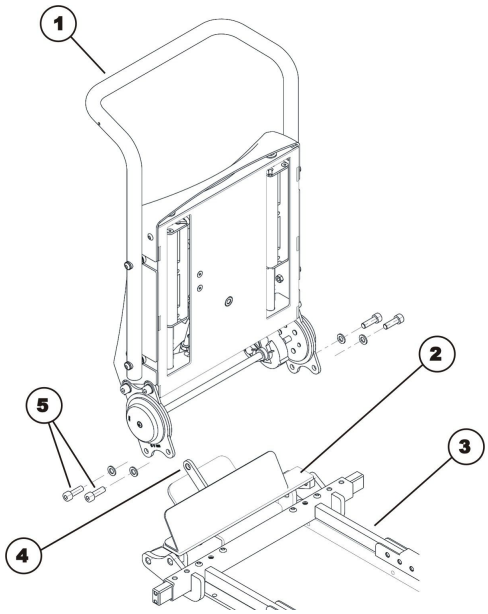

Fig. 6-129

Installing Back Unit

1. Refit parts in reverse order.
2. Test all functions.

6.14.2 Replacing / Adjusting Universal Backrest Frame for EasyAdapt

Tools:
- Measuring tape
- Adhesive tape
- 13 mm open-end wrench
- 4 mm Allen key
- 5 mm Allen key
- Phillips screwdriver, size 2

Removing Universal Backrest Frame

1. Remove backrest cushion.
2. Loosen and remove four Allen screws (1).
3. Remove universal backrest frame (2) from EasyAdapt backrest.

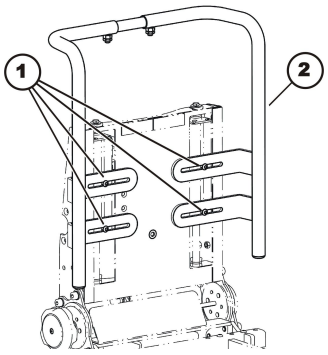

Fig. 6-130

Installing and Adjusting the Universal Backrest Frame

CAUTION!
The upholstery may get damaged.
When adjusting the backrest frame, make sure the upholstery cannot collide with other components.

1. Position both of protective caps (8) in lower ends of lateral tubes (1).
2. Mark center of middle tube (2) with piece of adhesive tape.
3. Insert middle tube into upper ends of lateral tubes.
4. Position lateral tubes of EasyAdapt backrest so that four Allen screws (7) can be screwed into slot nuts (6) through oblong holes. Tighten Allen screws just tight enough that lateral tubes can slide and be adjusted without difficulty.
5. Adjust distance between lateral tubes to desired value using measuring tape. Make sure both lateral tubes are at an equal distance to center of seat.
6. Tighten four Allen screws (7).
7. Adjust middle tube (2) so it is well centered.
8. Screw both of threaded pins (5) into threaded holes (3).
9. Secure threaded pins additionally with counter nuts (4). Tighten counter nuts finger-tight.
10. Screw four Phillips screws (9) into drill holes provided for this purpose on backs of tubes. Screws serve as limiters and prevent backrest from sliding down too far.
11. Remove marking from middle tube.
12. Refit all parts you have removed.
13. Test all functions.

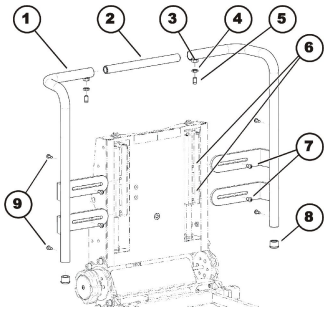

Fig. 6-131

6.15 Mounting Dahl Docking System

For more information about spare parts, accessory part installation in vehicles and maintenance of the Dahl Docking system, contact Dahl Engineering *www.dahlengineering.dk*.

To retrofit a mobility device with a Dahl Docking system, it is imperative, that the mobility device is equipped with the correct adapter plate. This adapter plate must be threaded to fix the lock plate of the Dahl Docking system underneath the mobility device. The maximum kerb weight of the mobility device must not exceed 200 kg.

- TX27 Torx key
- Low-strength thread locking adhesive (Loctite 222 or similar)

1. Remove batteries. See *Removing Batteries*.
2. 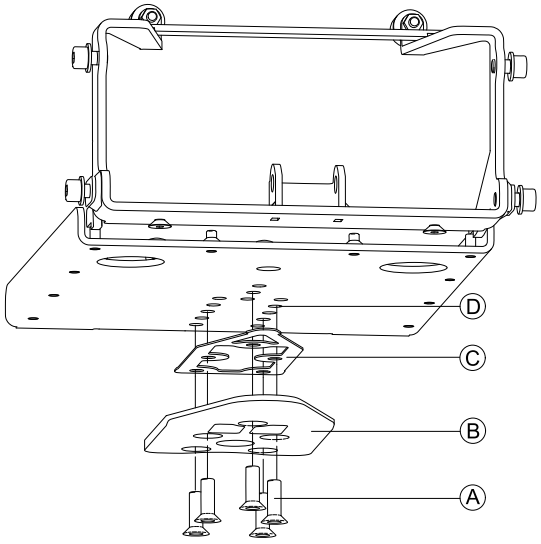

Fig. 6-132

   Place screws Ⓐ, lock plate Ⓑ and 8 mm spacer Ⓒ on adapter plate Ⓓ.

   8 mm spacer is mandatory. Additional spacers can be mounted to lock plate.

3. **Do not use any other screws than those supplied from Dahl Engineering (Part No. 502800). Standard countersunk M8 screws are not strong enough in the event of a collision.**

   Tighten screws (16 - 18 Nm).
4. Mark where to cut screws.
5. Remove screws, lock plate and spacer.
6. Cut screw.

   It is very important to check correct length of screws. If screws are too short to reach through threads, screws do not have strength to carry required load. If screws are too long, batteries or other components can be damaged. If screws are cut too short, replace them with original Dahl screws only.

7. Apply thread locking adhesive on screws.
8. Tighten lock plate and spacer with screws (16 - 18 Nm).
9. Connect mobility device with Dahl Docking station. Make sure lock plate is securely locked and all release methods work as intended. For more information about using the Dahl Docking system, see user manual.

Installation of Dahl Docking System in Vehicles

Only professional companies in the business of converting or building mobility device accessible vehicles can order the Dahl Docking system from Dahl Engineering.

A qualified and experienced technician must carry out the installation. Dahl Engineering can provide vehicle specific installation instructions for a large range of vehicles.

Notes

Notes

Notes

Invacare Sales Companies

Australia:
Invacare Australia Pty. Ltd.
1 Lenton Place, North Rocks NSW 2151
Australia
Phone: 1800 460 460
Fax: 1800 814 367
orders@invacare.com.au
www.invacare.com.au

Canada:
Invacare Canada L.P.
570 Matheson Blvd East, Unit 8
CDN Mississauga, On. L4Z 4G4
Phone: (905) 890 8300
Toll Free: 800.668.5324
www.invacare.ca

Ireland:
Invacare Ireland Ltd,
Unit 5 Seatown Business Campus
Seatown Road, Swords, County Dublin
Tel : (353) 1 810 7084
Fax: (353) 1 810 7085
ireland@invacare.com
www.invacare.ie

New Zealand:
Invacare New Zealand Ltd
4 Westfield Place, Mt Wellington 1060
New Zealand
Phone: 0800 468 222
Fax: 0800 807 788
sales@invacare.co.nz
www.invacare.co.nz

United Kingdom:
Invacare Limited
Pencoed Technology Park, Pencoed
Bridgend CF35 5AQ
Tel: (44) (0) 1656 776 222
Fax: (44) (0) 1656 776 220
uk@invacare.com
www.invacare.co.uk

Eastern Europe, Middle East & CIS:
Invacare EU Export
Kleiststraße 49
D-32457 Porta Westfalica / Germany
Tel: (49) (0)57 31 754 540
Fax: (49) (0)57 31 754 541
webinfo-eu-export@invacare.com
www.invacare-eu-export.com

Manufacturer:

Invacare Deutschland GmbH
Kleiststraße 49
D-32457 Porta Westfalica
Germany

1533060-P 2019-09-16

Making Life's Experiences Possible®

Yes, you can.